Mimaki

OPERATION MANUAL

MIMAKI ENGINEERING CO., LTD.

TKB Gotenyama Building, 5-9-41, Kitashinagawa, Shinagawa-ku, Tokyo 141-0001, Japan
Phone: +81-3-5420-8671 Fax: +81-3-5420-8687
URL: http: // www.mimaki. co. jp /
E-mail: trading@mimaki.co.jp

D200878

DISCLAIMER OF WARRANTY

THIS LIMITED WARRANTY OF MIMAKI SHALL BE THE SOLE AND EXCLUSIVE WARRANTY AND IS IN LIEU OF ALL OTHER WARRANTIES, EXPRESS OR IMPLIED, INCLUDING, BUT NOT LIMITED TO, ANY IMPLIED WARRANTY OF MERCHANTABILITY OR FITNESS, AND MIMAKI NEITHER ASSUMES NOR AUTHORIZES DEALER TO ASSUME FOR IT ANY OTHER OBLIGATION OR LIABILITY OR MAKE ANY OTHER WARRANTY OR MAKE ANY OTHER WARRANTY IN CONNECTION WITH ANY PRODUCT WITHOUT MIMAKIÅfS PRIOR WRITTEN CONSENT. IN NO EVENT SHALL MIMAKI BE LIABLE FOR SPECIAL, INCIDENTAL OR CONSEQUENTIAL DAMAGES OR FOR LOSS OF PROFITS OF DEALER OR CUSTOMERS OF ANY PRODUCT.

Requests

- This Manual has been carefully prepared for your easy understanding, however, please do not hesitate to contact a distributor in your district if you have any inquiry.
- Description contained in this Manual are subject to change without notice for improvement.

- Generally, names and designations referred to in this Manual are trade marks or registered trade marks of the manufacturers or suppliers.

Reproduction of this manual is strictly prohibited.
Copyright © 2005 MIMAKI ENGINEERING Co., Ltd. All Rights Reserved.

FCC Statement (USA)

This equipment has been tested and found to comply with the limits for a Class A digital device, pursuant to Part 15 of the FCC Rules. These limits are designed to provide reasonable protection against harmful interference when the equipment is operated in a commercial environment. This equipment generates, uses and can radiate radio frequency energy and, if not installed and used in accordance with the instruction manual, may cause harmful interference to radio communications.
Operation of this equipment in a residential area is likely to cause harmful interference in which cause the user will be required to correct the interference at his own expense.

CAUTION

- In the case where MIMAKI-recommended cable is not used for connection of this device, limits provided by FCC rules can be exceeded. To prevent this, use of MIMAKI-recommended cable is essential for the connection of this device.

INTERFERENCE TO TELEVISIONS AND RADIOS

The product covered by this Instruction Manual produces low radio waves while it is in operation. The product can interfere with radios and televisions if set up or commissioned under improper conditions. The product is not guaranteed against any damage to specific-purpose radio and televisions.
The product's interference with your radio or television will be checked by turning on/off the power switch of the product.
In the event that the product is the cause of interference, try to eliminate it by taking one of the following corrective measures or taking some of them in combination.

- Change the direction of the receiving antenna or the feeder of your radio/television.
- Change the installing direction of the product.
- Move the receiver away from the product.
- Use a power line for the receiver that is not shared with the product.

LASER SAFETY

This Model is certified as a Class I laser product under the U.S. Department of Health and Human Services Radiation Performance standard according to the Radiation Control for Health and Safety Act of 1968. This means that this Model does not produce hazardous laser radiation.

CDRH REGULATION

The Center for Devices and Radiological Health for the U.S. Food and Drug Administration Implement regulations for laser products. The Label shown below indicates compliance with the CDRH regulations and is labeled on the product when marketed in the United States. This Model is equivalent to Class I laser device according to CDRH Regulation.

This product complies with 21 CFR chapter I and subchapter J.

Foreword

Congratulations on your purchase of a Garment Printer “GP-1810”.

GP-1810 is a flat type, high-speed 4-color inkjet printer for garments and other cloths.

Read this Operation Manual carefully and make the most effective use of your printer.

- **[GP-1810] shifts by a high-speed head. To avoid danger of injury or damage, be sure to read this Operation Manual carefully before starting to operate it.**

On This Operation Manual

- This Operation Manual describes the operation and maintenance of Garment Printer GP-1810 (hereinafter referred to as the machine).
- Please read and fully understand this Operation Manual before putting the machine into service. It is also necessary to keep this Operation Manual on hand.
- Make arrangements to deliver this Operation Manual to the person in charge of the operation of this machine.
- This Operation Manual has been carefully prepared for your easy understanding, however, please do not hesitate to contact a distributor in your district or our office if you have any inquiry.
- Description contained in this Operation Manual are subject to change without notice for improvement.
- In the case where this Operation Manual should be illegible due to destruction by fire or breakage, purchase another copy of the Operation Manual from our office.

Table of contents

Foreword i
On This Operation Manual i
Features vi
Safety precautions during installation vii
Safety symbols used in manual vii
Example of pictorials within the manual vii
Never do the following viii
Precautions in use ix
Precautions in installation xi
How to read this operation manual xii
Display on the LCD and Indication of the Keys xii
Structure of this Operation Manual xiii

CHAPTER 1 Before Use

Where to install the machine 1.2
Moving the machine 1.3
Configuration and function 1.4
The Front 1.4
The Rear 1.5
Operation Panel 1.6
Capping station 1.8
Ink cartridge and Ink station 1.9
Precautions in handling the ink cartridge 1.9
Ink station 1.10
Types of work that can be used 1.11
Sizes of work that can be used 1.11
Precautions in handling the work 1.11
Direct printing on a cloth 1.12
MENU mode 1.13

CHAPTER 2 Basic Operations

Operation 2.2
Switching on the power supply 2.3
Turning the power on 2.3
Station cover 2.4
Opening/closing the station cover 2.4
Adjusting the head height 2.5
Setting the work on the machine 2.6
Fixing the work holder 2.7
Establishing the origin and the print area 2.8
Initial value 2.8
Changing the origin and the print area 2.9
Checking and solving nozzle clogging 2.10
Correcting the work feed rate 2.13
Correcting the media feed rate during printing 2.15
Printing an image from source data 2.16
Starting the printing operation 2.16
Interrupting the printing operation 2.17
Displaying machine information 2.18
To replenish ink, set a new ink cartridge in the ink station 2.19
Turning the power off 2.20

CHAPTER 3 Daily Care

Routine maintenance 3.2
When the machine is left unused for a long period of time 3.2
Precautions during cleaning 3.2
Maintenance for frame components 3.3
Cleaning the ink at the bottom of the slider 3.3
Cleaning the wiper and ink caps 3.4
Cleaning the nozzle [Nozzle Cleaning] 3.7
Replacing the flushing tray ink absorber 3.10
When the waste ink tank becomes full 3.12
Ink discharge way cleaning [Drain Wash] 3.13
When not in use the machine over the long term [Storage Wash] 3.15

CHAPTER 4 How to Set Functions

Basic operations of menus 4.2
Registering a type 4.4
Changing the type 4.4
Setup functions 4.5
Change the display language [DISPLAY] 4.8

CHAPTER 5 Maintenance

Maintenance of the machine 5.2
Setting the maintenance function 5.2
Maintenance setup functions 5.3
Printing setup conditions [LIST] 5.4
Printing HEX CODE [DATA DUMP] 5.5
When medium thickness is changed [Print Adjust] 5.6
Cleaning the station interior [Station]-[Carriage Out] 5.8
When the message [Replace Wiper] is displayed
[Station]-[Wiper Exchng] 5.9
Fill up the ink [Ink Filling] 5.11
Charging ink different from the one in use [Ink Change] 5.12
Displaying the firmware version [INFORMATION] 5.14
Specifying the print head line [Use Head] 5.15
Execute the flushing and cleaning regularly [Routine Control] 5.16

CHAPTER 6 When Abnormal Conditions Are Encountered

Abnormal conditions where no error massage appears 6.2
The machine cannot be energized 6.2
The machine cannot perform printing 6.2
If image quality declines 6.3
While lines/thin spots are obvious or dark stripes occur
(In the direction of travel of the head) 6.3
Characters fluctuate doubly or triply into paper feed 6.3
Displacement is observed between outward and inward printing
/The respective color ink injected by the respective color heads do not properly overlap 6.3
Large ink drop on medium 6.3
Become lighter during the printing and then printing without ink 6.3
Some strip streaks occur on the image with narrow print width 6.3
Problems where error messages are given on the LCD 6.4
Errors accompanied by warnings 6.4
Error messages 6.7

APPENDIX

Basic specifications A.2
Ink specification A.4
Consumable items A.5
Location of safety labels A.6
Function flowchart A.9

Features

The features of the machine are described below. Together with the method of operation of the machine explained in this manual, they help you understand how to use the machine properly.

Use the pigment ink for textile

The new pigment ink for textile allows for printing directly T shirt.
It allows for the heat treatment (simple post treatment) without media preparation. It is kind to the skin and remains breathable and absorbent.

High-Speed printing

New piezo electric heads, the staggered-layout print head provides more attractive, faster printing, and allows ultra high-precisions 6-head 1-way printing.

High-precision printing and high-quality images

The machine is capable of printing high-quality images with a maximum resolution of 720 dpi.

Head height adjustable to 50mm maximum

Can print on T-shirts and other materials placed around a board.

Prints on extra wide work of 1870mm maximum

Up to 1870mm wide work can be set for printing over up to a1860mm wide area.

Indication of the INK Remains

Since the amount of ink that remains can be checked even during operation of the machine, you can use the ink and medium without waste.

High-speed interface

The "IEEE-1394" interface allows for high-speed data reception from the computer.

Easy “origin” setting

The cross-shaped LED pointer allows easy visual setting.

Prevents the head and work collision

When the work is too thick or the head height is set too low, the head protective sensor senses the head height and avoids the head collision accordingly.

Safety precautions during installation

Safety symbols used in manual

Safety signal words

Pictorial signs are used in this Operation Manual for safe operation of and in prevention of damages to the machine. Pictorial signs and their meanings are given below. Read and fully understand before reading the text.

- **Indicates a potentially hazardous condition which, if not avoided, could result in serious injury or death. Be sure to read this manual for proper operation.**

- **Indicates a potentially hazardous condition which, if not avoided, could result in moderate or minor injury or property damage.**

- **The symbol "" indicates helpful information that will facilitate the use of the machine.**

- **Indicates the reference page for related contents.**

Example of pictorials within the manual

- **The symbol "△" indicates the case where some phenomenon that requires a CAUTION sign (including "DANGER" and "WARNING" signs) exists. A concrete precaution (precaution against an electric shock in the case of the sketch given on the left) is shown in the illustration.**

- **The symbol "⃠" indicates a prohibited behavior. A concrete illustration of prohibition (disassembly is prohibited in the sketch given on the left) is shown in or next to the illustration.**

- **The symbol "●" indicates a thing that is forced to be done and instruction that is forced to be followed. A concrete illustration of instruction (the removal of a plug from the receptacle is instructed in the sketch given on the left) is drawn in the illustration.**

Never do the following

⚠ WARNING

Do not disassemble or modify the machine.

- Never disassemble or remodel the main unit of the machine and the ink cartridge. Disassembling/ remodeling any of them will result in electric shocks or breakdown of the machine.

Do not use the machine in damp places.

- Avoid damp environments when putting the machine into service. Do not splash water onto the machine.
  High-humidity or water will give rise to fire, electric shocks or breakdown of the device.

Abnormal event occurs.

- If the machine is used under an abnormal condition where the machine produces smoke or unpleasant smell, fire or electric shocks can result. Be sure to turn off the power switch immediately and detach the plug from the receptacle. Check first to be sure that the machine no longer produces smoke, and contact a distributor in your district for repair. Never repair your machine by yourself since it is very dangerous for you to do so.

Handling of the power cable

- Use the supplied power cable.
- Take care not to damage, break or work on the power cable.
  If a heavy matter is placed on the power cable, heated or drawn, the power cable can break to cause fire or electric shocks.

Power supply and voltage

- Be sure to use the machine with the power supply specifications indicated.

- Be sure to connect the plug of the power cable to a grounded receptacle. If not, fire or electric shocks can result.

Handling of ink cartridges

- Store ink cartridges and waste ink tank in a place that is out of the reach of children.

- If ink settles on the skin or clothes, immediately wash it off with detergent or water.
  If you get ink in your eyes, immediately rinse off with water and consult a medical doctor.

Laser sensor

- This device is equivalent to Class I laser device according to CDRH Regulation. LASER CAUTION Label for CDRH regulation shown below is provided with the device. Also, the device is equivalent to a Class I laser device according to JIS/IEC standard. The label according to these standards shown below is provided with the device. To avoid causing pain in your eyes or visual impairment, do not review the laser beam through a lens or the other optical observation system.

Precautions in use

⚠ CAUTION

Periodic exchange parts

- There are some parts which must be replaced by service engineer. You have to make a contract with distributors or dealers for after-sale service.
- A head for the discharge liquid is consumable. Please exchange a new one in half a year when using it everyday.

Protection against dust

- It is strongly recommended to use the device in a room that is not dusty. Set the Refresh level 2 or 3 when in bad environment.
(page 4.6)

- Keep the front cover to be closed also when the machine is not engaged in printing. If not, dust can accumulate on the head nozzle.

- When leaving the workshop after the working hours, be sure to take off any medium from the roll hanger. If any medium is left on the roll hanger, dust can put on it.

- Store medium in a bag. Wiping off dust accumulated on a medium will adversely affect the medium due to static electricity.

- Frequently clean the capping station to eliminate dust and paper chips.

- Dust in the head will also cause drops of ink to fall on the media during printing. If this phenomenon takes place, be sure to clean up the head.
(page 3.4)

Front cover and lever

- Never open the front cover and/or lever during printing. Opening the cover or lever will abort printing.

Keep the machine level

- Adjust the level feet to keep the machine level at all times.

Warning labels

- This machine is adhered with ten warning labels. Be sure understand firmly the warnings given on the labels. In the case where any of the warning label has become so soiled that the warning message is illegible or has come off, purchase a new one from your local distributor or our office.
Refer to Appendix for the label adhering locations.

⚠ CAUTION

Ink cartridges

- If the ink cartridge is moved from a cold place to a warm place, do not use for three hours.

- Open the ink cartridge just before installing it in the machine. If it is opened and not installed for a long time, the machine may not plot normally.

- Make sure to store ink cartridges in a cold and dark place.

- Be sure to thoroughly consume the ink in the ink cartridge, once it is opened, within six months. If an extended period of time has passed away after opening the cartridge tank, printing quality would be poor.

- Using any ink type other than the exclusive one can cause a trouble. Remover that the user shall be charged for a repair cost to correct any damage resulting from the use of ink other than the exclusive type.

- The ink cartridge cannot be refilled.

- Neither pound the ink cartridge nor shake it violently so as to prevent leakage of ink.

- Do not touch or stain the contacts of the ink cartridge as doing so may cause damage to the print circuit board.

Precautions in installation

⚠ CAUTION

A place exposed to direct sunlight

- Do not install machine where it is exposed to direct sunlight or work may be discolored.

A place in which temperature and humidity vary by a great margin

- Use the machine under the following environment.

  Operating environment:
  15 to 30°C
  40 to 65% (Rh)

A place exposed to direct air blowing from air conditioner, etc.

- Do not install the machine that is directly exposed to blowing air from an air conditioner, etc, or you may get spattered with the ink.

A place that is not horizontal

- Do not place the machine where the machine can not be installed on a level surface, or you may not secure the stabilized print work.

A place that vibrates

- Do not install the machine where it is subject to vibration or you may not secure the stabilized plot work.

A place full of dust or cigarette smoke

- Do not install the machine where it is exposed to significant dust or cigarette smoke, or the dust may adheres to the machine and cause the ink drops to deflect.

How to read this operation manual

Display on the LCD and Indication of the Keys

In this Operation Manual, the characters displayed on the LCD of the operation panel and the keys used to operate the machine are explained, together with the operation procedure. ☞ page 1.6.
Operate the machine while confirming the display on the LCD.

Display on the LCD

The content of display is shown in characters in a box as shown at right.
Operate the machine according to the explanation of the operation procedure and the content of display on the LCD.
In this Operation Manual, each setting and messages displayed on the LCD is enclosed in [ ], like [Type1], [Please Wait], etc.

```
FUNCTION
SETUP                < ENT >
```

```
SETUP
SELECT             : Type 1
```

Operation keys

In the text of this Operation Manual, the operation keys are shown enclosed in brackets.
[▲] and [▼] indicate JOG keys.
The other operation keys are enclosed in brackets, as [FUNCTION].

Structure of this Operation Manual

This manual consists of the following six chapters to describe the handling of the machine.

Chapter 1 Before Use

This chapter describes the name and function of each section of the machine as well as ink and work.

Chapter 2 Basic Operations

This chapter describes a series of operations and settings, ranging from power-on to end of printing.

Chapter 3 Daily Care

This chapter describes the daily cleaning.

Chapter 4 How to Set Functions

This chapter describes the setting function.

Chapter 5 Maintenance Functions

This chapter describes functions intended to correct adverse influences on picture quality and to check abnormal conditions as well as the procedure to be taken to replace a used wiper.

Chapter 6 When Abnormal Conditions Are Encountered

This chapter describes how to correct troubles after the occurrence of an abnormal condition on the machine.

Appendix

This appendix describes the specifications of the machine, function menu structure and introduces separately-available consumables.

CHAPTER 1
Before Use

This chapter describes the name and function of each section of the machine as well as ink and work.

Table of contents

Where to install the machine 1.2
Moving the machine 1.3
Configuration and function 1.4
Ink cartridge and Ink station 1.9
Types of work that can be used 1.11
Direct printing on a cloth 1.12
MENU mode 1.13

Where to install the machine

Secure a suitable installation space before assembling the machine.
Install the machine considering enough space for the machine size and to perform print operation.

Model	Width	Depth	Height	Gross weight
GP-1810	3070 mm	2210 mm	1350 mm	620 kg or less

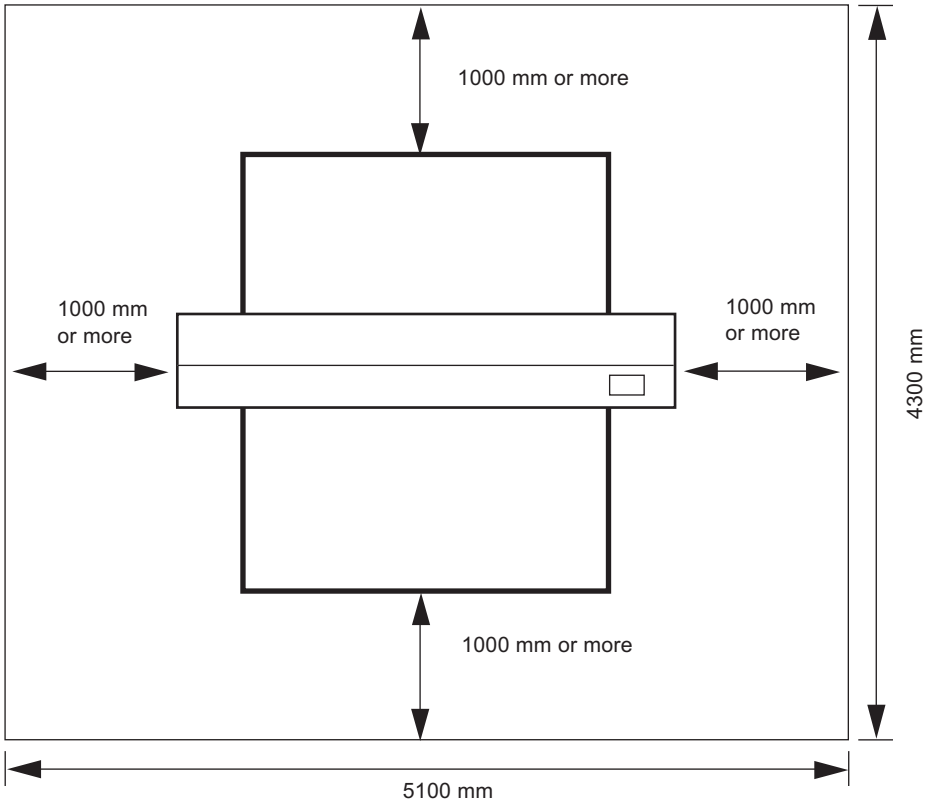

Moving the machine

This section explains to carry the machine to e.g., an instruction location after assembled.
Raise the level feet of the table frame before moving the machine to a new location.

WARNING

- **Be sure to disconnect the power cable and the interface cable before moving the machine.**
- **When moving the machine, take care not to apply excessive shock to it.**
- **Be sure to adjust the level feet to level the machine at the new location.**

Method of moving the machine

When moving the machine, it must be held up by at least eight persons as illustrated at right.

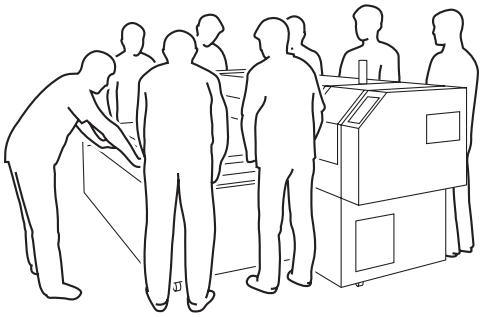

Locking the caster

Raise the level feet of the table frame before moving the machine to a new location.
Lower and adjust the level feet to level the machine at the new location.

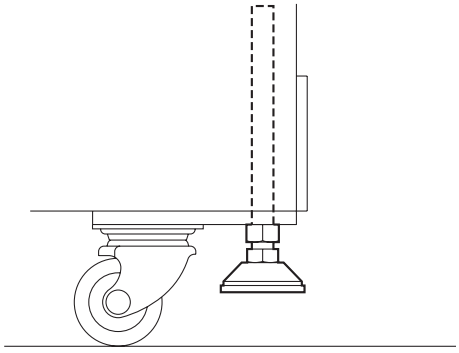

CAUTION

- Use a level gauge to ensure that the table is level in the front and in the back.

Configuration and function

The Front

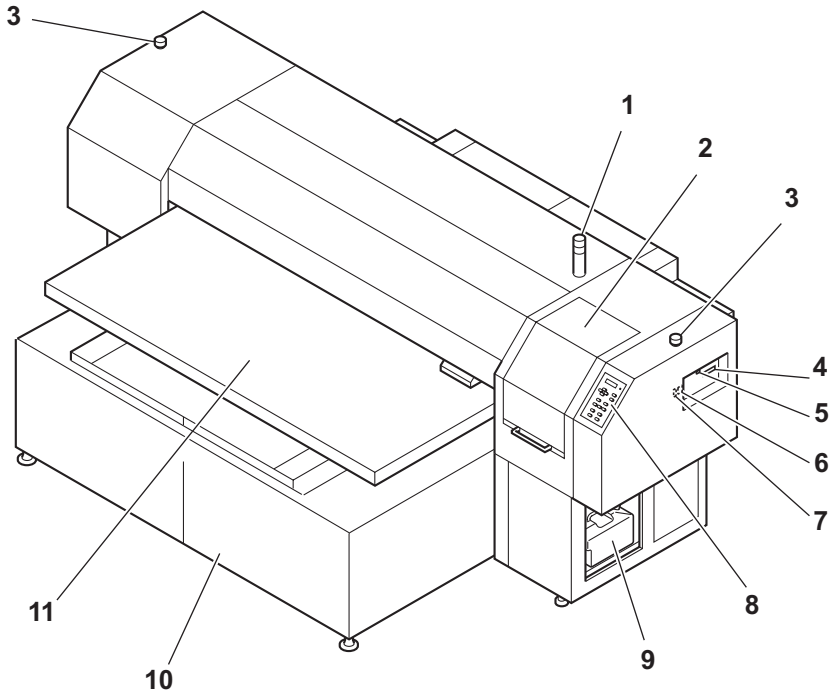

	Name	Function
1	Pilot lamp	Displays the machine status as ACTIVE (green), or ERROR (red).
2	Station Cover	A cover for the station maintenance. Open the cover when performing the station maintenance.
3	EMERGENCY Switch	(Emergency) Stop printing.
4	Parallel connector	Bi-directional parallel interface connector. (complies with IEEE1284)
5	IEEE1394 connector	A 400 M bps interface connector compatible with -IEEE1394.
6	AC inlet	The power cable is connected to the AC inlet.
7	Power switch	It turns on/off the power to the machine.
8	Operation panel	This panel has the operation keys required for operating the machine and the LCD for displaying set items, etc. (☞ page 1.6)
9	Waste ink tank	Waste ink gathers in this tank. (☞ page 3.12)
10	Table frame	It supports the main unit. It is provided with casters and level foots for moving the machine.
11	Table	Moves back and forth when performing printing.

The Rear

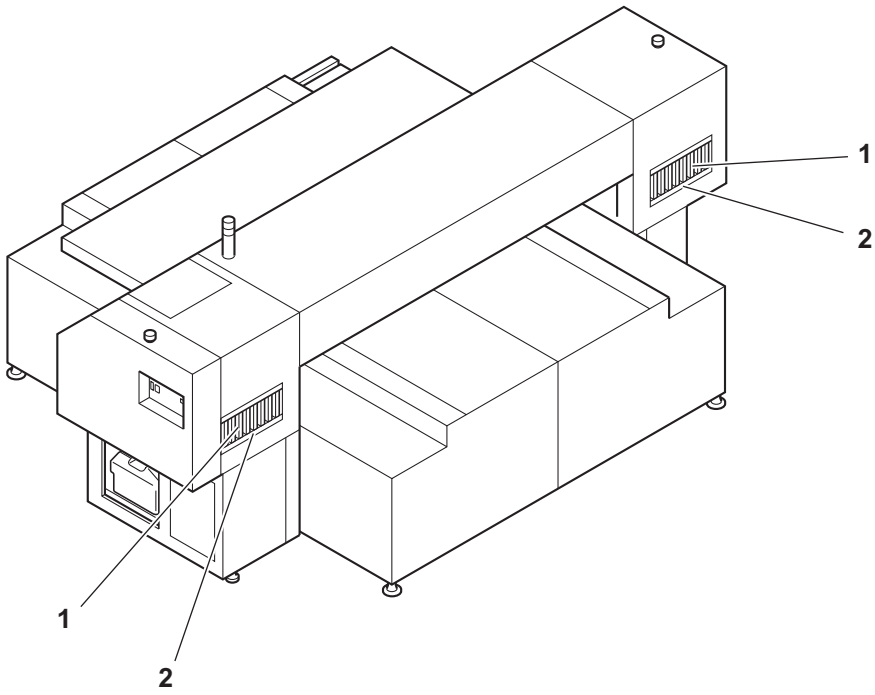

	Name	Function
1	Ink cartridge	Each cartridge contains ink of a specific color.
2	Ink station	Set the ink cartridges specified. (☞ page 1.10)

Operation Panel

The operation panel that is used to operate the machine.

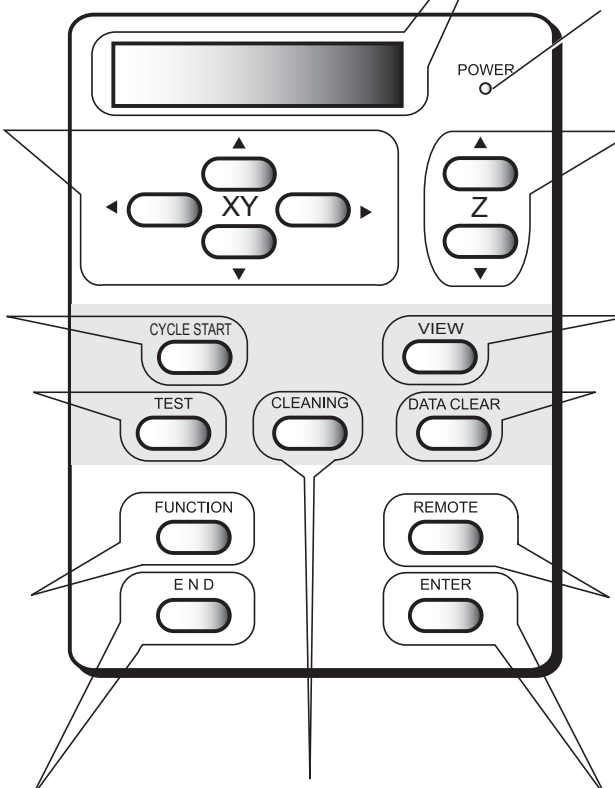

Display

Displays a set item, a guidance error, etc.

POWER lamp

It lights up (in green) when the power to the machine is turned on.

XY keys [▲] [▼] [◀] [▶]

They are used to shift the carriage and the medium under the LOCAL mode. In addition they are used to select a set value.

(☞ page 1.7)

Z key

Adjust the head (Y bar) height.

(☞ page 2.5)

[CYCLE START] key

Perform copy printing.

[VIEW] key

Used to attach and detach the work. The carriage retracts and the table moves forward. (☞ page 2.6)

[TEST] key

Prints the test pattern for checking Nozzle cogging.

(☞ page 2.11)

[DATA CLEAR] key

Erase the data has been received.

(☞ page 2.17)

[FUNCTION] key

Enter to the setting function menu. (☞ page 4.3)

[REMOTE] key

Change the operation mode between the REMOTE mode and the LOCAL mode.

(☞ page 1.13)

[END] key

Used to cancel the last set item that has been input or to return to the previous setting menu.

[CLEANING] key

Performs head cleaning when ink clogging occurs. (☞ page 2.11)

[ENTER] key

Used to move to the lower-level menu and establish the settings.

Functions of the XY keys

Each of the keys varies in function according to the time at which it is used.

	When setting a plotting origin / plotting area	When selecting a function	When inputting a choice selected among several alternatives
	Shifts the carriage to the left.	———	———
	Shifts the carriage to the right.	———	———
	Shifts the work (table) away from you.	Restores the last previous function.	Selects the next value.
	Moves the work (table) toward you.	Moves to the next function.	Selects the last previous value.

Functions of the Z keys

Press the Z keys to move the head (Y bar) height. (☞ page 2.5)

Capping station

The capping station consists of ink caps, wipers for cleaning the heads, etc.

Cap : It covers the nozzle so as to prevent the head nozzle from drying up.

Wiper : It is used to clean the head nozzle.
The wipers are consumable parts. If the wiper is deformed or the work is stained, replace the wiper with a new one.

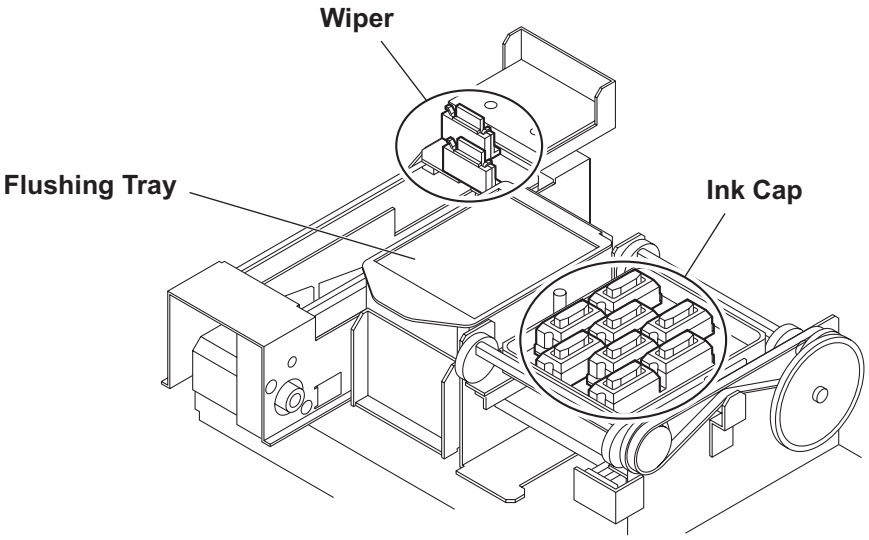

Ink cartridge and Ink station

Precautions in handling the ink cartridge

- **Use the specified ink.**
  Using any ink type other than the exclusive one can cause a trouble. Remember that the user shall be charged for a repair to correct any damage resulting from the use of ink other than the exclusive type.

- **If ink settles on the skin or clothes, immediately wash it off with soap and water.**
  If you get ink in your eyes, immediately wash your eyes with a lot of clean water. Then, consult a doctor as soon as possible.

- **Do not shake the ink cartridge violently. Shaking or turning it roughly can cause leakage of ink.**

- **Never disassemble the ink cartridge.**

- **The ink cartridge cannot be refilled. Refilling the ink cartridge can cause a trouble. Remember that MIMAKI assumes no responsibility for any damage caused by the use of the ink cartridge replenished with ink.**

- **Do not touch or stain the contacts of the ink cartridge as doing so may cause damage to the print circuit board.**

- **Be sure to store ink cartridges in a cold and dark place.**

- **If the ink cartridge is moved from a cold place to a warm place, leave it in the room temperature for three hours or more before using it.**

- **Be sure to thoroughly consume the ink in the ink cartridge, once it is opened, within six months. If an extended period of time has passed after opening the cartridge tank, plotting quality would be poor.**

- **Be sure to store ink cartridges in a cold and dark place.**

- **Store ink cartridges in a place that is out of the reach of children.**

- **Request an industrial waste processor for processing of empty cartridges.**

Ink station

The Right ink station supplies ink to the 2 front row of Carriage.

The Left ink station supplies ink to the 2 rear row of Carriage.

Remember these relationship when checking the heads for clogged nozzles, replacing ink cartridge and replenishing inks.

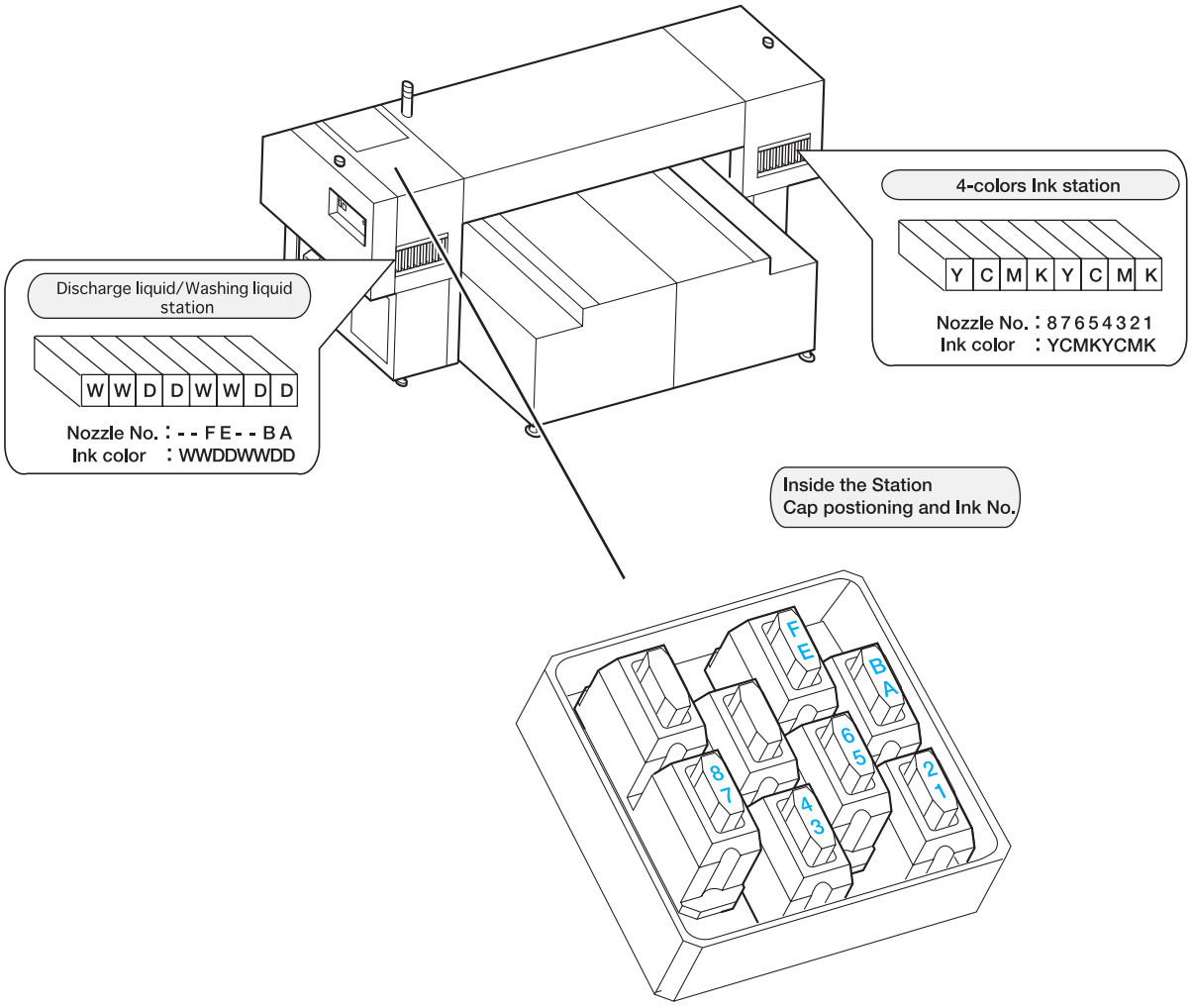

Types of work that can be used

The following describes the sizes of work that can be used and the method of handling.

Sizes of work that can be used

Maximum	1870 mm
Minimum	1050 mm
Max. printing width	1860 mm
Max. printing length	1010 mm
Thickness	50 mm or less
Weight	60kg or less when load is evenly distributed

Precautions in handling the work

Carefully observe the following when handling the work.

- **Work thickness**
  When setting the work used, adjust the head height.
  Otherwise, the work and/or the head can be damaged.

- **Expansion and contraction of the work**
  Do not use sheet types of work immediately after unpacking.
  The work can expand and contract due to room temperature and humidity.
  The work have to be left in the atmosphere in which they are to be used for 30 minutes or more after unpacked.

- **Warps of work**
  If you want to use board-shaped works, always use flat boards.

- **Other tips**
  - The device has a moving table. The work must be fixed to the table during operation. If necessary, fix the work with a tape.
  - Maintain a sufficient head gap when printing on a fluffy material. If the print head nozzle is allowed to touch the fluff, it may be blocked and affect the print quality.

Direct printing on a cloth

CAUTION

- **To minimize color variations, maintain constant humidity and temperature while printing directly on a cloth.**

1. When using the Pigment ink for textile (TPig ink)

- **No special preparation is necessary. Print on a dry cloth.**
- **Print twice to ensure higher color fastness.**
- **The post-treatment condition varies by the material of the heating process. Determine the optimum condition carefully.**

REFERENCE

	Press
T-shirt material	160°C / 60 second
Cotton broad cloth	190°C / 40 second

2. When using the dye ink

- **Pre-treatment and post-treatment of the cloth are necessary according to the acid dye ink (silk, nylon, etc.), reactive dye ink (cotton, etc.) or disperse dye ink (polyester, etc.).**
  Refer to the Ink guidance.
- **The machine can print on a wide variety of cloths and color stability, fastness and tones can vary significantly by pre-treatment in particular. Use your own judgment in deciding pretreatment and post-treatment and introduce changes as deemed necessary.**

CAUTION

- **Mixed use with TPig ink and dye ink**
  Assign the TPig ink at the back head of the carriage. It enables to perform the head cleaning easily.

MENU mode

The unit's four modes are described blow.

< LOCAL > mode

This mode is for the preparatory state.
All keys are effective to enable setups.
The machine is able to receive data from computer, however, it will not perform printing.
In this mode, it is possible to perform the following operations.

1. Pressing the appropriate XY keys to set up an origin and the printing area.
1. Pressing the Z keys to set up the print head (Y bar).
2. Pressing the [TEST] key to start test printing.
2. Pressing the [CLEANING] key to start cleaning the print head.
3. Pressing the [DATA CLEAR] key to erase the printing data the machine has received.
4. Pressing the [FUNCTION] key to set plotting conditions.
5. Pressing the [VIEW] key brings the work to the detaching position.

< REMOTE > mode

The machine prints an image from data it receives.
During the printing operation, press the [REMOTE] key to interrupt the printing operation.
While the machine is in the LOCAL mode, press the [REMOTE] key to put the machine into the REMOTE mode.

< CYCLE START > mode

This mode may be used in combination with "Raster Link Pro" to repeat printing using the identical data (copy). "Raster Link Pro" has a copy function which eliminates the need to send data from the computer for every printing.
While the machine is in the LOCAL mode, press the [CYCLE START] key to put the machine into the CYCLE START mode.

< FUNCTION > mode

While the machine is in the LOCAL mode, press the [FUNCTION] key to put the machine into the FUNCTION mode.
This is the mode in which printing conditions can be set.

CHAPTER 2
Basic Operations

This chapter describes a series of operations and settings, ranging from power-on to end of printing.

Table of contents

Operation 2.2
Switching on the power supply 2.3
Station cover 2.4
Adjusting the head height 2.5
Setting the work on the machine 2.6
Establishing the origin and the print area 2.8
Checking and solving nozzle clogging 2.10
Correcting the work feed rate 2.13
Correcting the media feed rate during printing 2.15
Printing an image from source data 2.16
Displaying machine information 2.18
To replenish ink, set a new ink cartridge in the ink station 2.19
Turning the power off 2.20

Operation

The following shows a series of operations and settings, ranging from power-on to end of printing. For details on each item, refer to the reference page.

Turn on the power on ☞ P. 2.3

⇩

Check the head height ☞ P. 2.5

⇩

Set the work ☞ P. 2.6

⇩

Set the origin and printing area ☞ P. 2.8

⇩

Print the test pattern ☞ P. 2.10

⇩

Correct the work feed rate ☞ P. 2.13

⇩

Start the printing ☞ P. 2.16

Turn off the power ☞ P. 2.20

Switching on the power supply

Turning the power on

1. **Turn on the power to the computer which is connected to the machine.**

2. **Turn on the power to the machine.**
   Press the power switch to " I ".

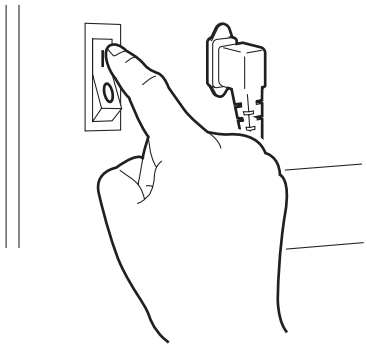

- **Make sure that the station cover is closed. If it is open, initialization is not performed.**
- **Leave 10 seconds and more intervals before turning on the power after once turning off.**

When the power is switched on, the LCD first displays "BOOT" and then displays the firmware version number.

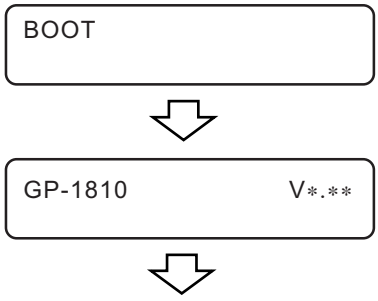

3. **The message [Please Wait] appears flushing on the LCD.**
   The initial operation of the machine is performed.

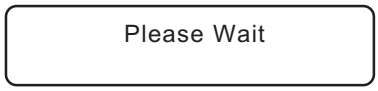

- **To avoid injuries, keep your hands away from the machine while in motion.**

4. **The machine enters the LOCAL mode.**
   Display the print area.

CAUTION

- **The Local mode is not available until ink initialization is completed. Install the ink cartridges. (Refer to page 24 of the setup guide.)**
- **The following message will appear when the ink cartridges are not installed:**

Station cover

Opening/closing the station cover

CAUTION

- **Keep the station cover closed during printing operation. Opening the station cover during printing interrupts image printing and disables continuous processing.**

If you open the station cover during printing, the carriage will stop for safety, resulting in abortion of printing. In this case, re-start the machine and computer following the procedure described below.

STEPS:

1. **When opening the station cover during printing, the message shown on the right will be displayed.**
   Stop the printing.

   Check Stop SW or
   Station Cover

2. **Stop the data transmission from the computer.**

3. **Close the station cover.**

   PRESS < ENT > KEY

4. **Press the [ENTER] key.**

   ENTER

   Please Wait

5. **The carriage will start to move.**
   The carriage will carry out a series of performance same as that taken after turning on the power to the machine.
   (☞ page 2.3)

Adjusting the head height

The head can be adjusted in height, according to thickness of a work used for printing.
The head height must be set according to the work thickness. If the head height is too low, it may affect the printing quality and even damage the work or the machine itself. Be sure that the head height is correct

CAUTION

- **Adjust the head height before setting a work on the machine.**
- **Leave at least 3mm clearance when printing on T-shirts or other fluffy materials. Otherwise, the head will touch the fluff and affect the print quality.**

- **Confirm the head height setting value, press the [ENTER] key in the LOCAL, REMOTE and CYCLE mode. (☞ page 2.18)**

STEPS:

1. The machine enters the LOCAL mode.

Press the [REMOTE] key and put the machine back into the LOCAL mode.

2. Press the Z [▲] or [▼] keys to adjust the head height.

The ideal head height is equal to the work thickness + 1.0 to 2.0mm. Check the work thickness before adjusting the head height.

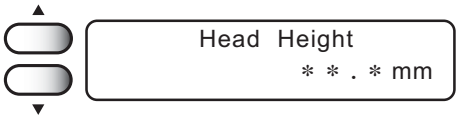

CAUTION

- **If the work thickness is not uniform, use the work thickness at the thickest point.**

3. Press the [ENTER] key.

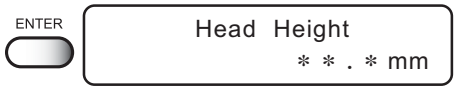

4. The machine revert the LOCAL mode.

Setting the work on the machine

Set the work on the table as following.

CAUTION

- **Adjust the head height before placing a work on the machine. (☞ page 2.6)**
- **Always print on flat works.**
- **When printing on T-shirts or other cloths, set them flat.**

STEPS:

1. **Turn on the power to the machine.**

2. **Adjust the head height. (☞ page 2.5)**
   After adjusting, return to the LOCAL mode.

3. **Press the [VIEW] key.**

4. **Push the [VIEW] key or the [ENTER] key.**
   The table moves toward you.

5. **The machine revert the LOCAL mode.**

6. **Set the work on the marking on the table.**

CAUTION

Secure work in such a manner that work can not float or be dislocated.

Fixing the work holder

When printing on a material of allowable size (1870 x 1050mm maximum) that tends to bend upward (floating at two or four edges), use the work holders on any of the four table edges to fit the work in place.

STEPS:

1. **Turn (or remove) the knob screws to loosen the work holder.**

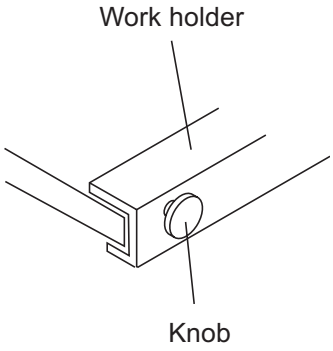

> CAUTION
> **A collar is fitted to each of the screws of the work holder. Do not lose them when they are removed.**

2. **The right and left work holders may be turned upside down as needed according to the work size.**

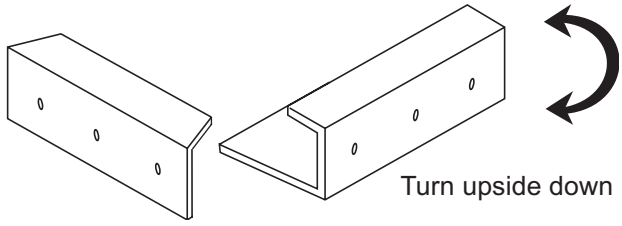

Front and back work holders (L-shaped; cannot be turned upside down)

3. **Place the work between the work holder and the table.**

4. **While pressing the work holder down, re-tighten the knob screws.**

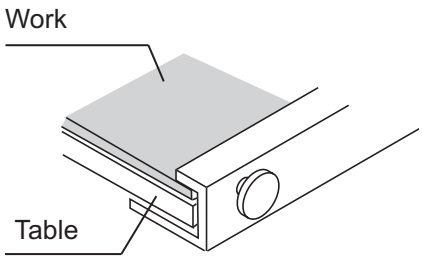

Establishing the origin and the print area

Initial value

The origin and the print area are set as follows by default until they are changed:

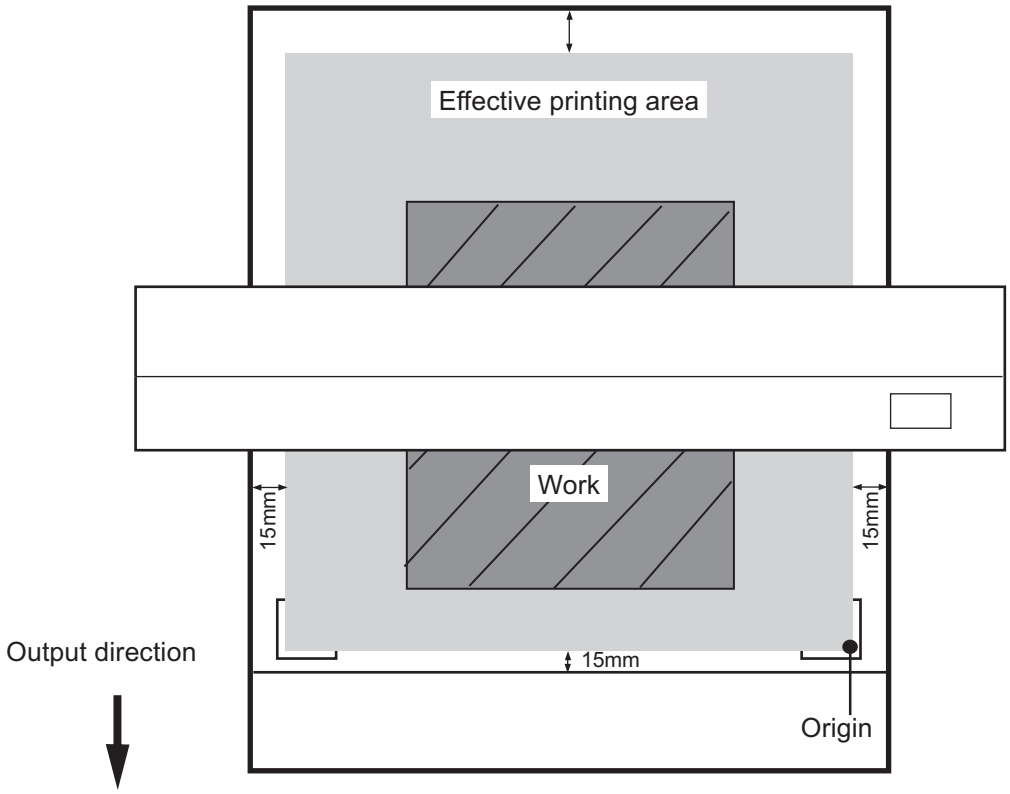

Changing the origin and the print area

The default origin and the print area may be changed as needed.

CAUTION

- **When printing on the entire work surface (without margins), the printing origin and the printing area must be set outside of the work. They must be set as close to the work as possible, however, to minimize smearing the machine itself. Otherwise, there will be much ink mists especially when printing on thick works.**

STEPS:

1. The machine enters the LOCAL mode.

```
<< LOCAL >>
X =1010          Y = 1860
```

2. Move the carriage to the position at which to establish an origin by pressing the XY[▲], [▼], [◀] or [▶] keys.

The origin changes as the carriage moves.

```
Origin Setup
X = 500          Y = 970
```

- **A cross-shaped point mark appearing on the table or the work will be the display coordinate.**

3. After deciding the origin, press the [ENTER] key.

ENTER

```
Origin Setup
＊＊＊＊ Origin ＊＊＊＊
```

4. Press the [ENTER] key.

Press the [END] key if the print area is to be left unchanged.

ENTER

```
Print Area
end <            > ent
```

5. Set the print area by pressing the XY[▲], [▼], [◀] or [▶] keys.

Display the new print area determined by the carriage movement.

```
Print Area
X = 990          Y = 1810
```

6. After deciding the print area, press the [ENTER] key.

The machine revert the LOCAL mode.

The new print area is displayed.

ENTER

```
<< LOCAL >>
X = 990          Y = 1810
```

- The new setting is saved until the origin or the print area is changed.
- The print area will be set to the initial value if it is set to the same position as the origin.

Checking and solving nozzle clogging

Make test printing to check whether there is nozzle clogging or other printing failures.
If the finished test pattern shows any sign of abnormal conditions, carry out the cleaning function.

CAUTION

- **To perform the test print on a cut sheet medium, use a medium whose size is A4 or larger with placed in landscape configuration.**

Test Pattern

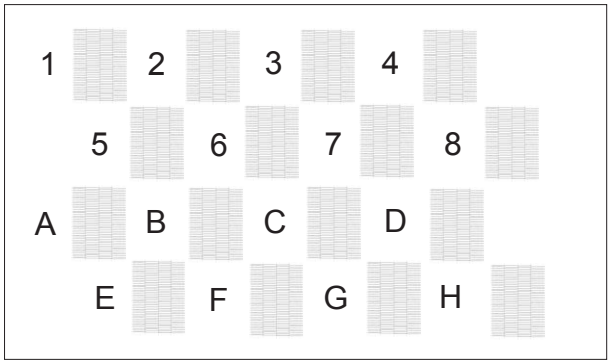

Output direction

Normal Pattern

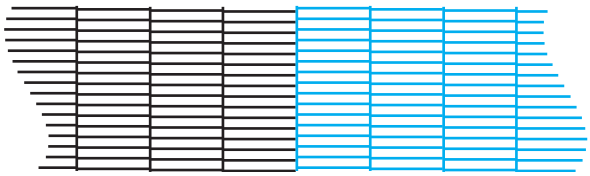

Abnormal Pattern

Nozzle is dirty

Clogged with ink

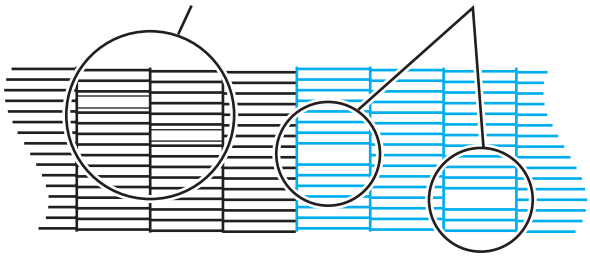

STEPS:

1. **The machine enters the LOCAL mode.**

2. **Press the [TEST] key.**

3. **Press the [TEST] key or [ENTER] key.**
   The machine prints the test pattern.

   After the test print is done, the table moves to the front and turns to LOCAL mode.

4. **Check the test patterns.**
   Operation is completed in normal cases.

If a failure occurs, perform the following operation

5. **Press the [CLEANING] key.**

6. **Press the XY keys [◀] or [▶] to select the head-block for cleaning.**
   (Refer to page.1.10 [Ink station])

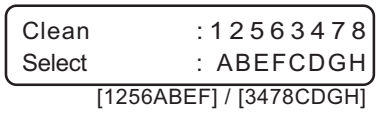

[1256ABEF] / [3478CDGH]

7. **Press the XY [▲] or [▼] keys to set on/off of the blocks that need cleaning.**
   Do not execute the head cleaning as for [-----].

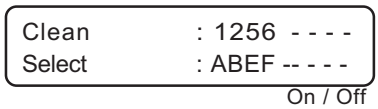

On / Off

8. **Press the [ENTER] key.**

9. **Press the XY [▲] or [▼] keys to select the type of cleaning.**

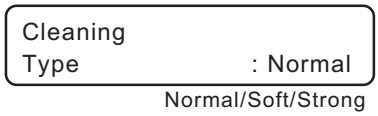

Normal/Soft/Strong

Normal	:	Select this if there is any missing line.
Soft	:	Select this if any line is bent. (When selecting the Pigment ink for textile [T Pig], this function is invalid.)
Strong	:	When printing trouble is not solved even with [Norma]l or [Soft].

10. Press the [ENTER] key.

It displays the remaining run-time.

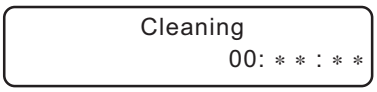

11. The machine revert the LOCAL mode.

12. Change the work, or establish the new origin.

13. Repeat steps 2 and 3, and check the result of the test printing.

Repeat STEPS 2 to 10 until normal printing result is obtained.

CAUTION

- **Replace the wiper and the ink cap if inferior printing does not improve after cleaning operations. (☞ page 3.4)**
- **In case the TPig ink and dye ink are mixed, the inferior print image may not be improved in the cleaning, if the TPig ink is set at the front side of the carriage. Reset the TPig ink at the back side of the carriage, perform the cleaning operation again.**

Correcting the work feed rate

When the work type is changed, the amount of work feed changes.
If the correction value is not appropriate, stripes may occur in the printing, disturbing neat printing.
Correction for the work feed rate in online is available. (☞ page 2.15)

CORRECTING PATTERN

Print two bands.
Adjust the print density so that the boundary of the two bands is printed with an even density,
Setting value : -100 – 100

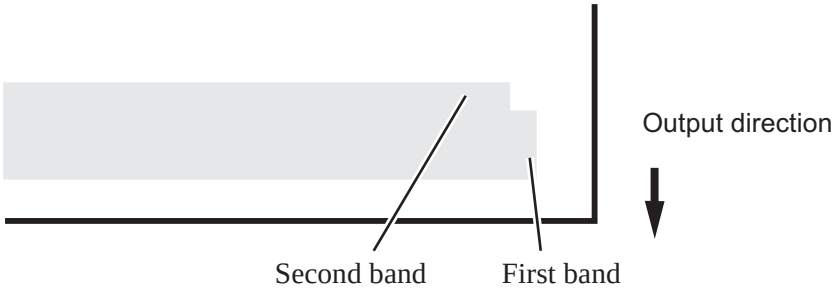

Correction value is too large

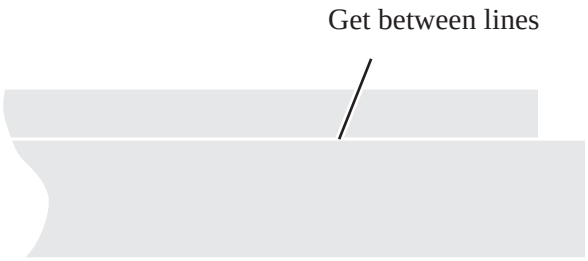

Correction value is too small

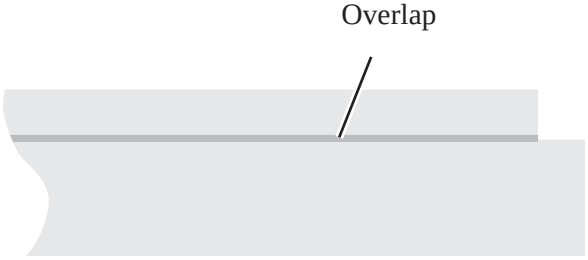

STEPS:

1. **The machine enters the LOCAL mode.**

2. **Press the [FUNCTION] key.**

3. **Press the [ENTER] key.**

4. **Press the XY [▲] or [▼] keys to select a type.**

5. **Press the [ENTER] key.**

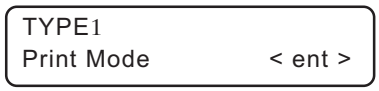

6. **Press the XY [▲] or [▼] keys to select [Feed Comp.].**

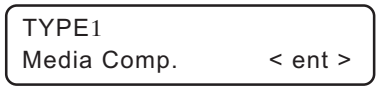

7. **Press the [ENTER] key.**

8. **Press the XY [▲] or [▼] keys to enter the printing width.**

9. **Press the [ENTER] key.**
   Output the pattern.

10. **Check the patterns.**
    Enter a correction value from the output pattern.

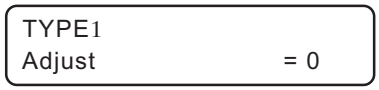

- **When [ADJUST] is changed to 30, the pattern moves by about 0.1 mm. Determine the correction value referencing this amount of movement.**

11. **Press the [ENTER] key.**
    Register the correction value.
    Repeat steps 8 to 11 until normal printing result is obtained.

12. **Press the [END] key three times, and the menu returns to the LOCAL mode.**

Correcting the media feed rate during printing

To perform this operation during LOCAL mode, refer to the “Feed Correct”(page 2.13).

The following describes the procedures to alter the media feed rate during printing or in a REMOTE mode.

STEPS:

1. **Press the [REMOTE] key.**

2. **Press the [FUNCTION] key to confirm the current setting value.**
   Press the [END] key when an appropriate value is set or to abort the operation.

3. **Press the [ENTER] key.**
   Available to alter the medium feed rate.

4. **Press the XY [▲] or [▼] keys as needed to set the amount of correction.**
   Setting value is available from -100 to +100. Press the [END] key to return to the REMOTE display. The altered value ceases to be in effect, and returns to the previous value.

- **A new value takes effect in real time. The best effect can be obtained while checking the result.**
- **The unit of the correction value is the same as in “Feed Correct” in the LOCAL mode. (page 2.13)**
- **Setting value is to be Reset as follow,**
  ***Perform the Feed Correct.**
  ***Perform the Setup reset**

5. **Press the [ENTER] key.**
   Confirm the medium feed rate before saving it. Press the [END] key to return to the REMOTE display. The changed setting value is to be in effect performing till the next power on.

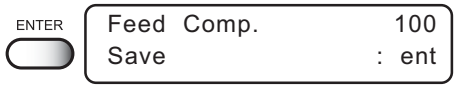

6. **Press the [ENTER] key to return to the REMOTE display.**
   The changed setting value is saved. The value is to be in effect performing till Reset.

Printing an image from source data

Starting the printing operation

The following describes the method of printing.

For various function settings necessary for printing, refer to “CHAPTER4 How to Set Functions”.

STEPS:

1. The machine enters the LOCAL mode.

2. Press the [REMOTE] key.

The machine enters the REMOTE mode.

3. Transmit data from the computer.

The printing conditions that have been set for the data are displayed.

For the method of data transmission, see the manual for the output software.

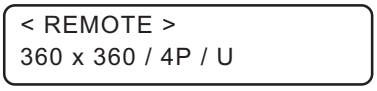

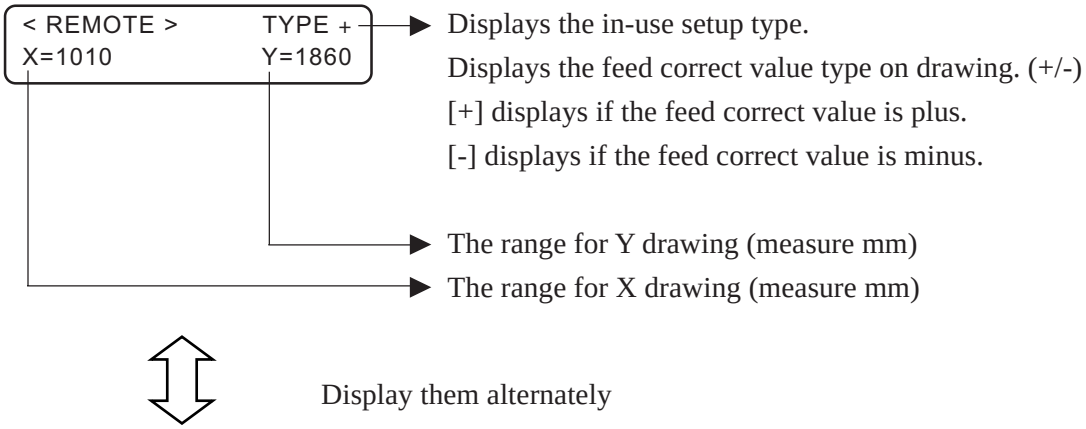

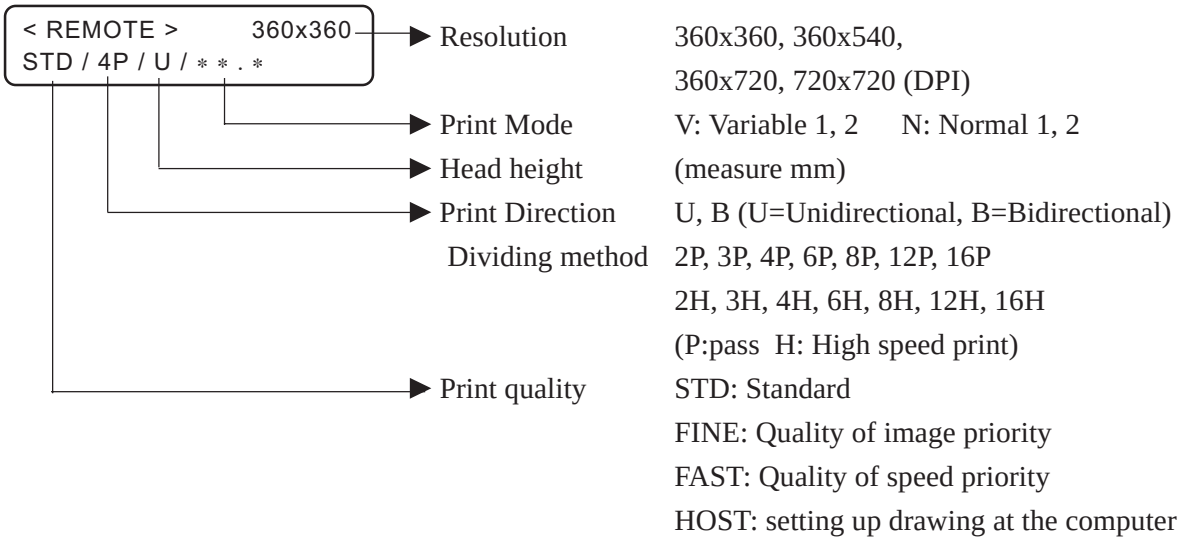

4. During the printing.

5. After the printing operation is completed, put the machine back into the LOCAL mode.

The table will move toward you when printing in the Cycle Start mode.

- **The origin and the print area remain unchanged after printing. You must reset them if they need to be changed. (page 2.9)**

Interrupting the printing operation

To interrupt the printing operation, stop the carriage and erase (the receive data) from the machine.

STEPS:

1. Press the [REMOTE] key to stop the printing operation.

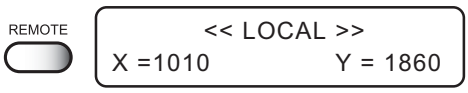

2. If data is being transmitted from the computer to the machine, stop the data transmission.

3. Press the [DATA CLEAR] key.

The data that has been received is erased.

4. Press the [DATA CLEAR] key or [ENTER] key.

The machine enters the LOCAL mode.

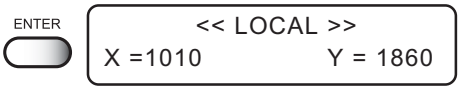

- The green pilot lamp indicates that there is no data in the machine.

Displaying machine information

Displays the firmware version, ink level etc. This following describes the procedures to display the machine in formation during printing or REMOTE and CYCLE mode.

- **In LOCAL mode, information displays by pressing [ENTER] key as well.**

STEPS:

1. **Display the LOCAL mode.**

2. **Press the [REMOTE] key.**
   The machine enters the REMOTE mode.

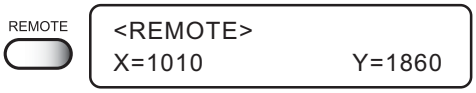

3. **Press the [ENTER] key to display the ink remains.**

4. **Press the [ENTER] key to display the head height.**

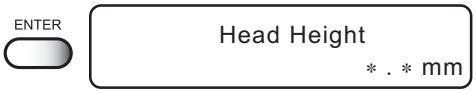

5. **Press the [ENTER] key to display the ink type.**

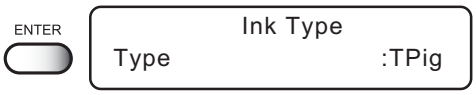

6. **Press the [ENTER] key to display the firmware version and command.**

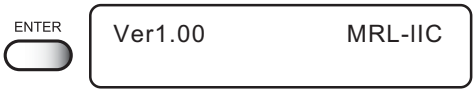

7. **The [ENTER] key displays setting status.**
   The [▼] key displays the in-use setup contents.

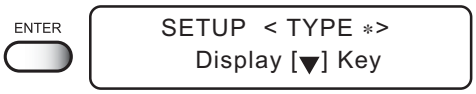

8. **The [ENTER] key displays error information guidance.**
   The [▼] key displays current warning.

9. **Press the [END] key, the machine returns to the REMOTE or CYCLE mode.**

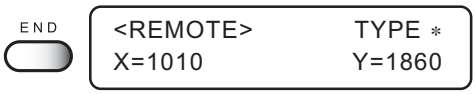

- **Return to the REMOTE mode or CYCLE mode automatically when the 60 seconds pass over or error is occurred.**

To replenish ink, set a new ink cartridge in the ink station

If ink in the cartridge comes to an empty, the corresponding message appears.
Printing can be continued but ink may run out during printing.
Immediately put a new ink cartridge.

< When the amount of ink becomes small during printing >

Indicate the ink color which has run out.
The display at right indicates that [slot1] and [slotA] comes to an end.

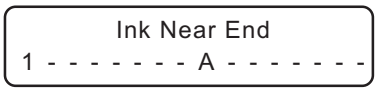

< When the amount of ink completely runs out during printing >

Indicate the ink color which has completely run out.
The display at right indicates that [slotC] runs out.

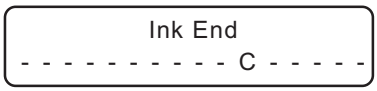

STEPS:

1. **Either of the messages shown above is displayed on the LCD during printing.**
   When [INKnearEND] appears, the LOCAL mode is resumed and the operation stopped each time printing of a single data is completed. Proceed with Step 2 at the end of the printing operation. Proceed to Step 2 at the end of the printing operation.
   When [INKEND] appears, printing cannot be continued.

2. **Install a new ink cartridge.**
   Pull out the ink cartridge of the indicated number and then set a new ink cartridge.

3. **The machine enters the LOCAL mode.**
   Continuous printing is possible.

Turning the power off

To turn the power off, check first whether there is data in the machine that remains to be printed. Also make sure that the head rests at the capping station.

CAUTION

- **If the power is turned off while the machine is engaged in printing, the head may fail to be retracted in the capping station. If the head is left without capped for an extended period of time, the nozzle will be clogged with dust. If the power to the machine is turned off without the head capped, return on the power to the machine.**
- **When turning off the power, be sure to fill up some head washing liquid in the discharge head, and then turn off the power.**

1. **Turn off the power to the computer which is connected to the machine.**

2. **Turn off the power to the machine.**
   Press the power switch to [O].

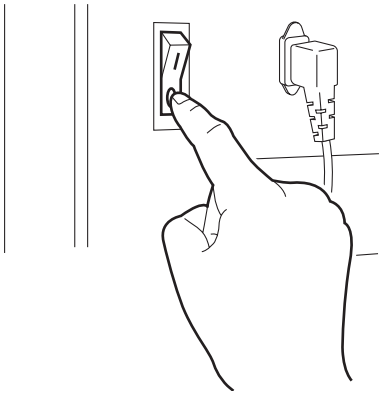

CHAPTER 3
Daily Care

This chapter describes daily cleaning.

Table of contents

Routine maintenance 3.2
Cleaning the wiper and ink caps 3.4
Cleaning the nozzle [Nozzle Cleaning] 3.7
Replacing the flushing tray ink absorber 3.10
When the waste ink tank becomes full 3.12
Ink discharge way cleaning [Drain Wash] 3.13
When not in use the machine over the long term [Storage Wash] 3.15

Routine maintenance

Be sure to conduct maintenance works for the machine when necessary or periodically so as to use the machine for a long time while keeping its printing accuracy.

When the machine is left unused for a long period of time

- **Be sure to turn off the power of machine. (☞ page 2.20)**
- **Remove the work which setting on the table.**

Precautions during cleaning

- **Never disassemble the machine. Disassembling the machine can result in electric shock hazards and breakage of the machine.**
- **To prevent electric shock hazard and damage to the machine, do not allow moisture to get inside.**
- **Turn off power and detach power cable before doing any maintenance.**
- **Benzene, thinner and chemical agents containing abrasives. Such materials can deteriorate or deform the surface of the cover.**
- **Do not apply lubricating oil or the like inside the machine. Such materials can cause the printer mechanism to fail.**
- **When printing to the untreated fabric without preparation by TP ink (TPig), it may cause adhere of some cotton waste, dirt and dust around the head nozzle, the station cap rubber, and wiper. With some dust on the nozzle face, it may cause some ink drips on the fabric. With some dust on the wiper, it also causes some trouble on cleaning. Accordingly, clean the nozzle, the cap rubber, and wiper every time when operation is terminated.**

Maintenance for frame components

If the frame components of the machine have become dirty, wipe off frame with soft cloth using water or neutral detergent diluted with water, squeeze it and wipe the frame components clean. Clean the table also as dust may cause ink fly-bend or dropping.

Cleaning Tools :

- **Neutral detergent**
- **Soft cloth (quantity)**

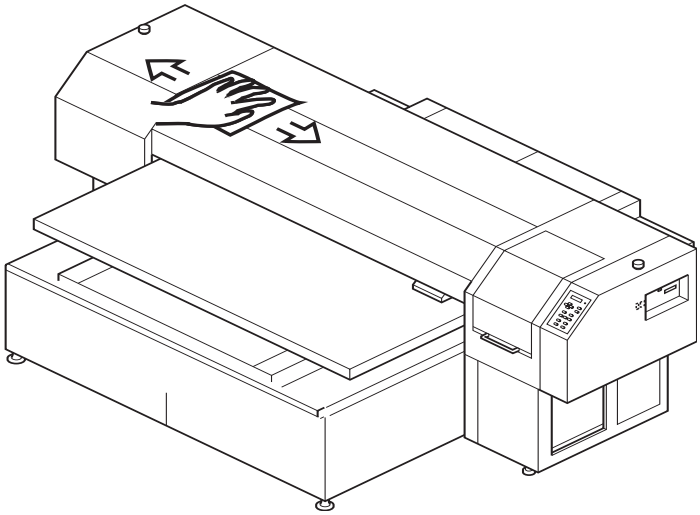

Cleaning the ink at the bottom of the slider

The ink may gel and collect under the slider after a long use. The ink droplets may grow in size and smear the work as a result. To prevent this problem, wet the supplied cotton swab in the cleaning liquid (A29) and use it to remove the ink from under the head in regular intervals.

- **Do not use the cotton swab on the head nozzles. The brush may damage the nozzles and cause poor ink delivery.**

Cleaning Tools :

- **Cleaning liquid (A29)**
- **Cotton swabs**

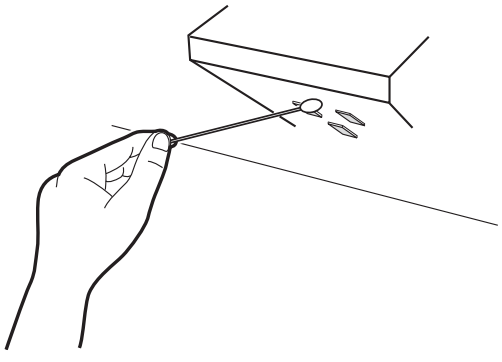

Cleaning the wiper and ink caps

The ink cap prevents clogging of the head nozzle caused by dried nozzle.
The wiper wipes out ink adhered to the head nozzle.
As the machine is used to print images, the wipers and ink caps gradually become stained with ink and dust. Use the cotton buds to clean the ink and wiper.
Clean the wiper and the ink cap periodically so as to keep the machine in good operation condition.

CAUTION

- **Clean the wiper at the end of the day's operation.**
- **Remove dust from the wiper before starting head cleaning. A dusty wiper may damage the head and cause defective printing.**
- **Clean the two wipers at a time.**
- **Do not move the carriage out of the capping station by hand.**
- **The Front side of each wiper is made of felt, and the rear side is made of rubber. Do not rub the felt side with a swab. Instead, press the swab against the felt side surface to remove dirt. Rubbing the felt side surface will make it fluffy and result in clogged nozzle. Wipe ink off the rubber side surface with a swab.**

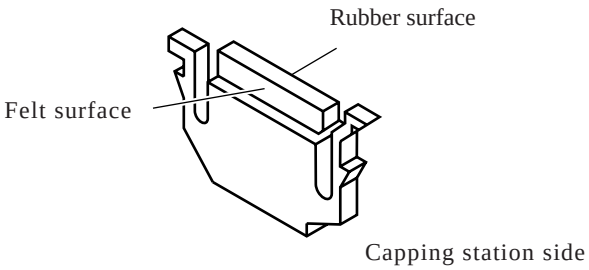

- **Once the replacement of the wiper and the cleaning of the caps have been completed, immediately press the [ENTER] key to allow the carriage to return to the capping station. If the carriage is left in the aforementioned state for an extended period of time, the nozzles can be clogged.**

Cleaning Tools :

- **Cleaning liquid (A29)**
- **Cotton swabs**

STEPS:

1. **Press the [FUNCTION] key.**

FUNCTION
SETUP < ENT >

2. **Press the XY [▲] or [▼] keys to select [MAINTENANCE].**

FUNCTION
MAINTENANCE < ENT >

3. **Press the [ENTER] key.**

MAINTENANCE
List < ent >

4. **Press the XY [▼] or [▼] keys to select [Station].**

MAINTENANCE
Station < ent >

5. **Press the [ENTER] key.**

The table moves away from you and the Y-bar moves upward. The wiper moves toward you and the carriage moves away from the station.

Station Maint
Sel : Carriage Out

6. **Open the station cover, then clean up the wiper.**

Use and push a cotton swab contained cleaning liquid (A29) to take off some dust on the felt surface.

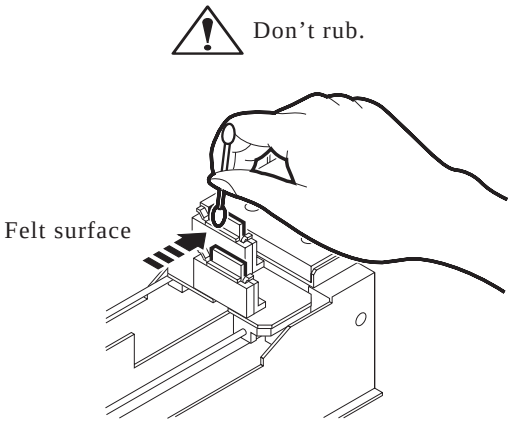

Use a cotton swab contained cleaning liquid (A29) to take off some inks on the rubber surface.

- If dirt of curl is serious, replace the wiper with a new one. At the time of replacement, be sure to terminate the machine operation and follow the wiper replacement procedure.

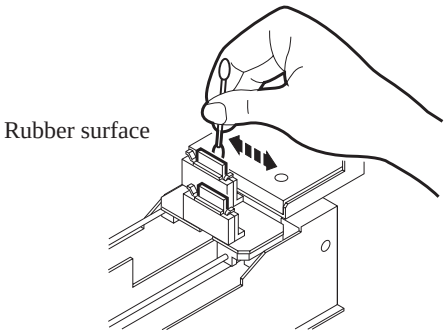

7. Clean the wiper guide shaft using a cotton swab of cloth.

If dirt is hard to remove, use a cotton swab of cloth dampened with water.

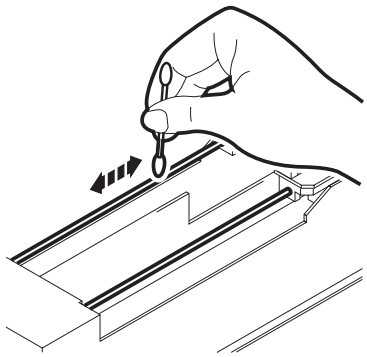

CAUTION

- Extremely dirty wiper guide shaft may cause operationed failure of the wiper, resulting in error display.

8. Wipe off ink or dirt adhered to the rubber of the cap and the ceiling of the wiper cover using cotton swab.

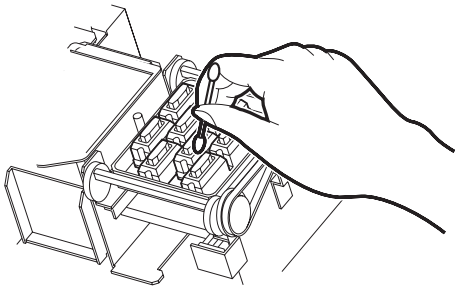

CAUTION

- Clean the area at the end of the day's operation.

9. Close the station cover, then press the [ENTER] key.

Execute the initial operation.

ENTER

Carriage Out
Completed : ent

Initialize
Please Wait

10. Return to the LOCAL mode.

<< LOCAL >>
X =1010 Y = 1860

Cleaning the nozzle [Nozzle Cleaning]

Clean up the nozzle as for nozzle clogging.
If nozzle clogging cannot be resolved even after cleaning several times, execute the [Ink Filling] function. (☞ page 5.11)
If this error cannot be resolved with these functions, contact the dealer.

CAUTION

- **Two colors (two cartridges) per head are used. If the remaining amount of one ink is extremely greater than another ink's amount, it may flow into the cartridge which has lesser ink to make their ink-head even.**
  Execute the [Ink Filling] function (P.5-11) if the inks are mixed.
- **Operate it in the head only with the nozzle clogging.**

Cleaning Tools :

- **Cleaning liquid bottle kit A29 (SPC-0137 : Option)**
- **Syringe**

STEPS:

1. **Press the [FUNCTION] key in the LOCAL mode.**

```
FUNCTION
SETUP                < ENT >
```

2. **Press the XY [▲] or [▼] keys to select [MAINTENANCE].**

```
FUNCTION
MAINTENANCE          < ENT >
```

```
MAINTENANCE
List                 < ent >
```

3. **Press the [ENTER] key.**
   [Station] is displayed.

```
MAINTENANCE
Station              < ent >
```

4. **Press the XY [▲] or [▼] keys to select [Nozzle Clean].**

```
Station Maint
Sel              : Nozzle Clean
```

5. **Press the [ENTER] key.**
   The table moves backward, the Y-bar moves to the top, the wiper moves forward, and the carriage moves on the table.

```
Color May Mix Up
Continue OK?         : ent
```

6. **Open the station cover.**

Use and push a cotton swab contained cleaning liquid (A29) to take off some dust on the felt surface.

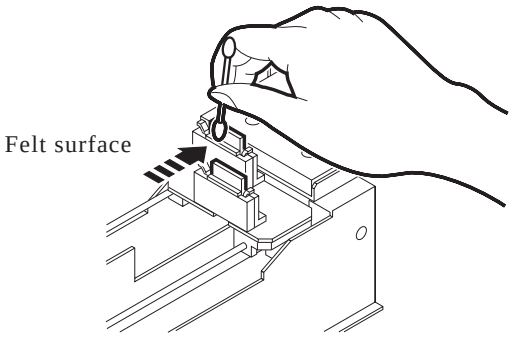

Use a cotton swab contained cleaning liquid (A29) to take off some inks on the rubber surface.

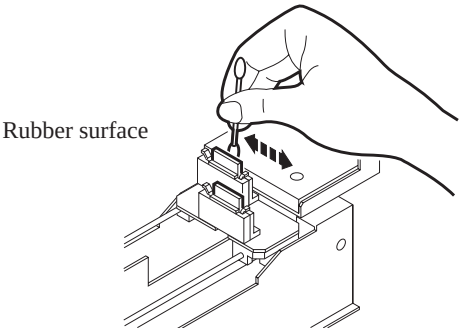

7. **Clean the wiper and press the [ENTER] key.**

Wiper Cleaning
Completed : ent

8. **Fill the cap with the cleaning liquid (A29) using a syringe.**

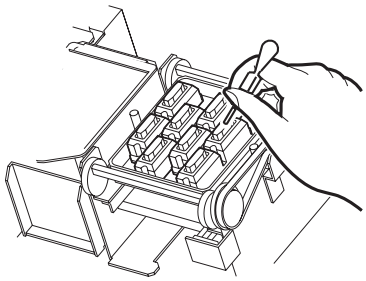

9. **Close the station cover, and press the [ENTER] key.**

Fill Up Washings
Completed : ent

10. Press the XY [▲] or [▼] keys, select the time to leave. (1-99 minutes: 1 min unit)

Normally set 1 min.

```
Nozzle Cleaning
Wait Timer          = 1 min
```

11. Press the [ENTER] key.

The initial operation is performed.

```
Initialize
Please  Wait
```

Remaining time is displayed.

```
Waiting
00 : * * : * *
```

After remaining time is over, execute cleaning.
It displays the remaining cleaning time.

```
Cleaning
00 : * * : * *
```

12. Cleaning is completed, the menu returns the LOCAL mode.

```
<< LOCAL >>
X =1010          Y = 1860
```

Replacing the flushing tray ink absorber

Replace the ink absorber in the flushing tray if it appears to be clogged. Clogged ink absorber may cause ink mists and smeared head nozzles.
In addition, ink bounce causes some ink drips on the nozzle during flushing. Some ink drips may cause some trouble on ink firing.

CAUTION

- **Check the ink absorber for clogging at the end the day's operation.**

Cleaning Tools:

- **Ink absorber (Order No. M-3)**
  (It is the same as a mist filter)

STEPS:

1. **Press the [FUNCTION] key.**

2. **Press the XY [▲] or [▼] keys to select [MAINTENANCE].**
   Press the [ENTER] key.

3. **Press the XY [▲] or [▼] keys to select [Station].**

4. **Press the [ENTER] key.**

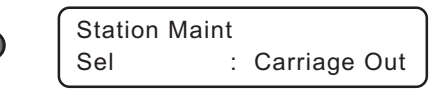

5. **Press the [ENTER] key.**
   The table moves away from you and the Y-bar moves upward. The wiper moves toward you and the carriage moves away from the station.

6. **Open the station cover.**

7. Remove the F-cover upward from the flushing tray.

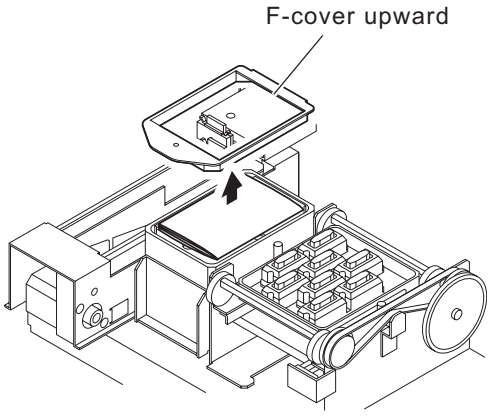

8. Remove the ink absorber.

9. Place a new ink absorber (supplied) on the tray.

Place the ink absorber (as folded) at the center.

CAUTION

- Make certain the ink absorber is placed flat and touching the tray. Otherwise, it may interfere with the head nozzles.

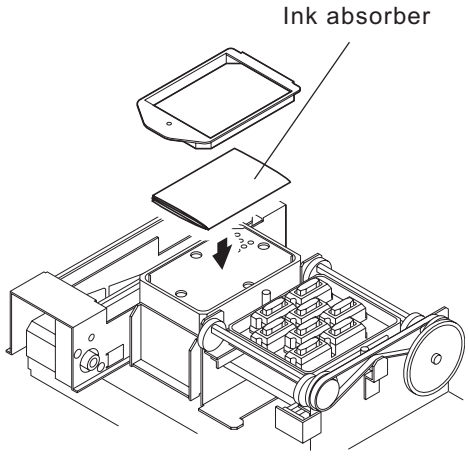

10. Place the F-cover from above.

CAUTION

- Place the F-cover all the way down. A floating cover may cause trouble.

11. Close the station cover, then press the [ENTER] key.

The initial operation is performed.

Carriage Out
Completed : ent

Initialize
Please Wait

12. Return to the LOCAL mode.

<< LOCAL >>
X =1010 Y = 1860

When the waste ink tank becomes full

Waste ink used for cleaning the heads will gather in the waste ink tank.
When the message “Near Full” or “Full” appears, immediately replace the tank with a new waste ink tank.

Waste Ink Tank Ink Tank Near Full	Waste Ink Tank Ink Tank Is Full

- **Contact your local MIMAKI distributor or call a local MIMAKI office if you need a spare waste ink tank.**
- **Prepare a polyethylene tank for emptying waste ink.**

- **If ink is dripping, wait until it stops dripping.**
- **Dispose a long-term unused waste ink regardless of its amount.**

STEPS:

1. Pull out the tank toward you.

- When pulling out the waste ink tank, hold the opening of the waste ink tank with paper and then slowly pull it out to prevent waste ink from spattering.
- Before replacing ink, put paper on the floor to prevent it from being stained with ink.

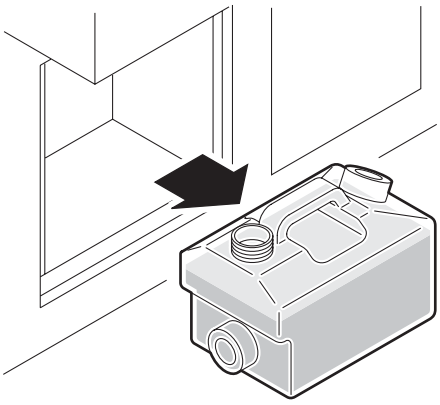

2. Dump waste ink into a separate polyethylene tank.

- Request an industrial waste processor for processing of empty cartridges.

3. Put the empty waste ink tank back in the machine.

Ink discharge way cleaning [Drain Wash]

The ink discharge way may become clogged by coagulated ink. It must be cleaned at regular intervals to avoid clogging.
Ink discharge way: Tubing between the cap and the waste ink tank

CAUTION

- **Do not move the carriage out of the capping station by hand. Use the appropriate operation key to move the carriage.**

Cleaning Tools :

- **Cleaning liquid bottle kit A29 (SPC-0137 : Option)**
- **Syringe**

STEPS:

1. **Press the [FUNCTION] key once.**

2. **Press the XY [▲] or [▼] keys to select [MAINTENANCE].**

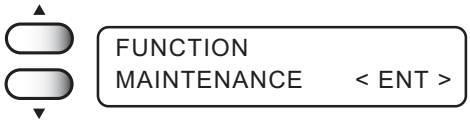

3. **Press the [ENTER] key.**
   [Station] is displayed.

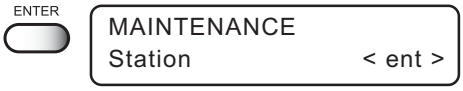

4. **Press the [ENTER] key.**
   [Carriage out] is displayed.

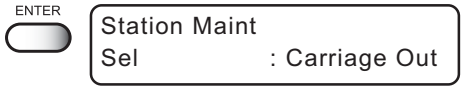

5. **Press the XY [▲] or [▼] keys to select [Drain Wash].**

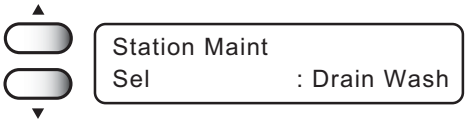

6. **Press the [ENTER] key.**
   The table moves backward, the Y-bar moves to the top, the wiper moves forward, and the carriage moves on the table. Dry suction starts in cycles consisting of 10 seconds of suction followed by 10 seconds of pause.

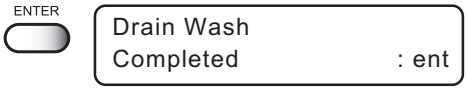

7. **Open the station cover.**

8. **Remove the cleaning liquid (A29) with a syringe. During the suction pause period, drop the cleaning liquid (A29) until just before it overflows from the cap.**

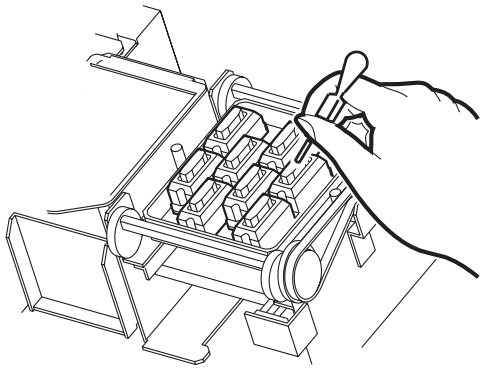

9. **Close the front cover, and press the [ENTER] key.**

   Dry suction continues for 30 seconds and then the machine is put in LOCAL mode.

```
Drain Wash
Completed                : ent
```

```
        Initialize
      Please  Wait
```

10. **Return to the LOCAL mode.**

```
        << LOCAL >>
X =1010          Y = 1860
```

When not in use the machine over the long term [Storage Wash]

When not in use the machine over a week, perform [Storage Wash] function to clean the head nozzle and ink discharge way.
After performing the function, store the machine.

CAUTION

- **Two colors (two cartridges) per head are used. If the remaining amount of one ink is extremely greater than another ink's amount, it may flow into the cartridge which has lesser ink to make their ink-head even.**
  Execute the [Ink Filling] function (☞ page 5.11) if the inks are mixed.

Cleaning Tools :

- **Cleaning liquid bottle kit A29 (SPC-0137 : Option)**
- **Syringe**

STEPS:

1. **Press the [FUNCTION] key once.**

```
FUNCTION
SETUP                < ENT >
```

2. **Press the XY [▲] or [▼] keys to select [MAINTENANCE].**

```
FUNCTION
MAINTENANCE          < ENT >
```

3. **Press the [ENTER] key.**
   [Station] is displayed.

```
MAINTENANCE
Station              < ent >
```

4. **Press the XY [▲] or [▼] keys to select [Storage Wash].**

```
Station
Sel              : Storage Wash
```

5. **Attention about the ink mixing is displayed. Press the [ENTER] key.**

```
Color May Mix Up
Continue OK?             : ent
```

6. **Press the [ENTER] key.**
   The table moves backward, the Y-bar moves to the top, the wiper moves forward, and the carriage moves on the table.

```
Wiper Cleaning
Completed                : ent
```

7. **Open the station cover.**

8. **Take off the wiper with holding projections at the tips of wiper.**

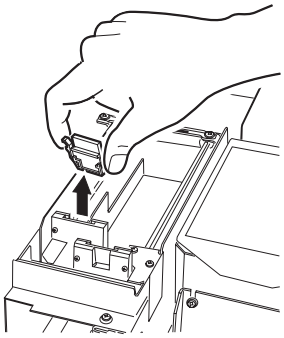

9. **Use a cotton swab soaked with the cleaning liquid (A29) to clean off ink blots on wiper and bracket.**

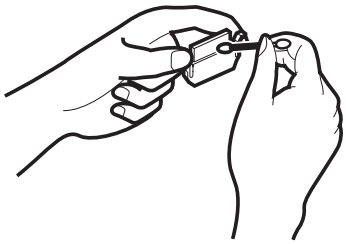

- If dirt of curl is serious, replace the wiper with a new one. At the time of replacement, be sure to terminate the machine operation and follow the wiper replacement procedure.

10. **Insert the clean wiper with holding both projections at the tips of wiper.**

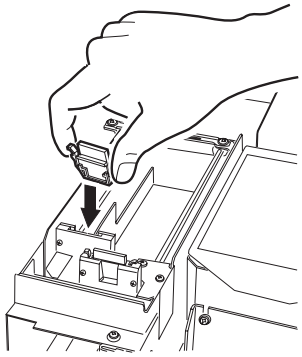

11. **Press the [ENTER] key.**

Wiper Cleaning
Completed : ent

12. **Fill the cap with the cleaning liquid (A29) using a syringe.**

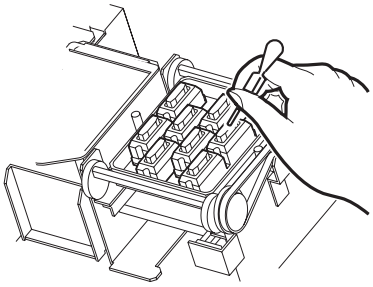

13. Close the station cover, and press the [ENTER] key.

14. Press the JOG [▲] or [▲] keys, select the time to leave. (1-99 minutes: 1 min unit)

Normally set 1 min.

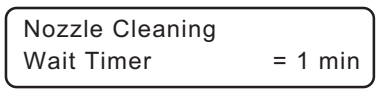

15. Press the [ENTER] key.

The initial operation is performed.

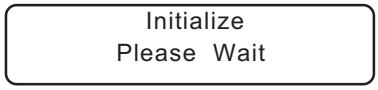

Remaining time is displayed.

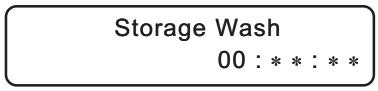

After remaining time is over, execute cleaning.
Remaining cleaning time is displayed.

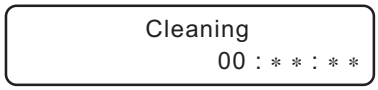

After cleaning the nozzles, the Y-bar moves to the top. The wiper moves toward you and the carriage moves away from the station.

16. Open the station cover.

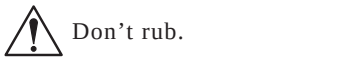

17. Use and push a cotton swab contained cleaning liquid (A29) to take off some dust on the felt surface.

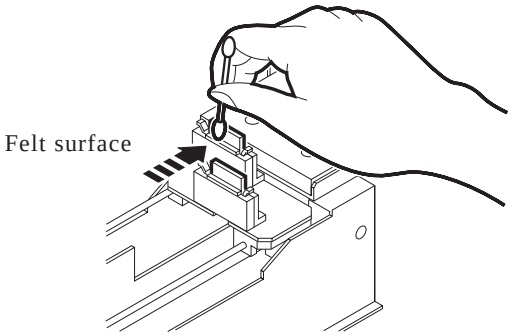

Use a cotton swab contained cleaning liquid (A29) to take off some inks on the rubber surface.

- If dirt of curl is serious, replace the wiper with a new one. At the time of replacement, be sure to terminate the machine operation and follow the wiper replacement procedure. (page 5.9)

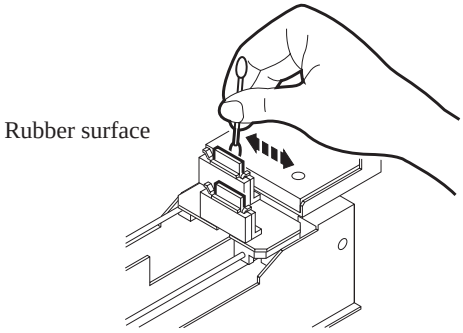

17. Clean the wiper and press the [ENTER] key.

Wiper Cleaning
Completed : ent

18. Clean the wiper guide shaft using a cotton swab of cloth.

If dirt is hard to remove, use a cotton swab of cloth dampened with water.

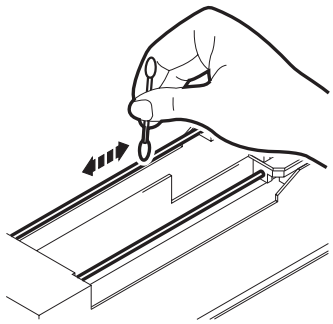

CAUTION

- Extremely dirty wiper guide shaft may cause operationed failure of the wiper, resulting in error display.

20. Fill the cap with the cleaning liquid (A29) using a syringe.

Dry suction starts in cycles consisting of 10 seconds of suction followed by 10 seconds of pause.
Repeat the performance of the air aspiration several times to clean up the ink discharge way.
Perform the operation for the each cap.

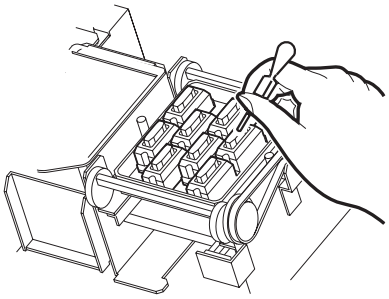

21. Close the station cover, and press the [ENTER] key.

Carrige returns the station to the initial operation performed.

ENTER

Storage Wash
Completed : ent

Initialize
Please Wait

22. Return to the LOCAL mode.

<< LOCAL >>
X =1010 Y = 1860

CHAPTER 4
How to Set Functions

This chapter describes how to set up the machine.

Table of contents

Basic operations of menus 4.2
Registering a type 4.4
Setup functions 4.5
Change the display language [DISPLAY] 4.8

Basic operations of menus

This section describes how to change over the operation modes and how to operate the menus.
The following gives the key operation flow to invoke menus.
For detailed menu configuration, refer to Appendix.

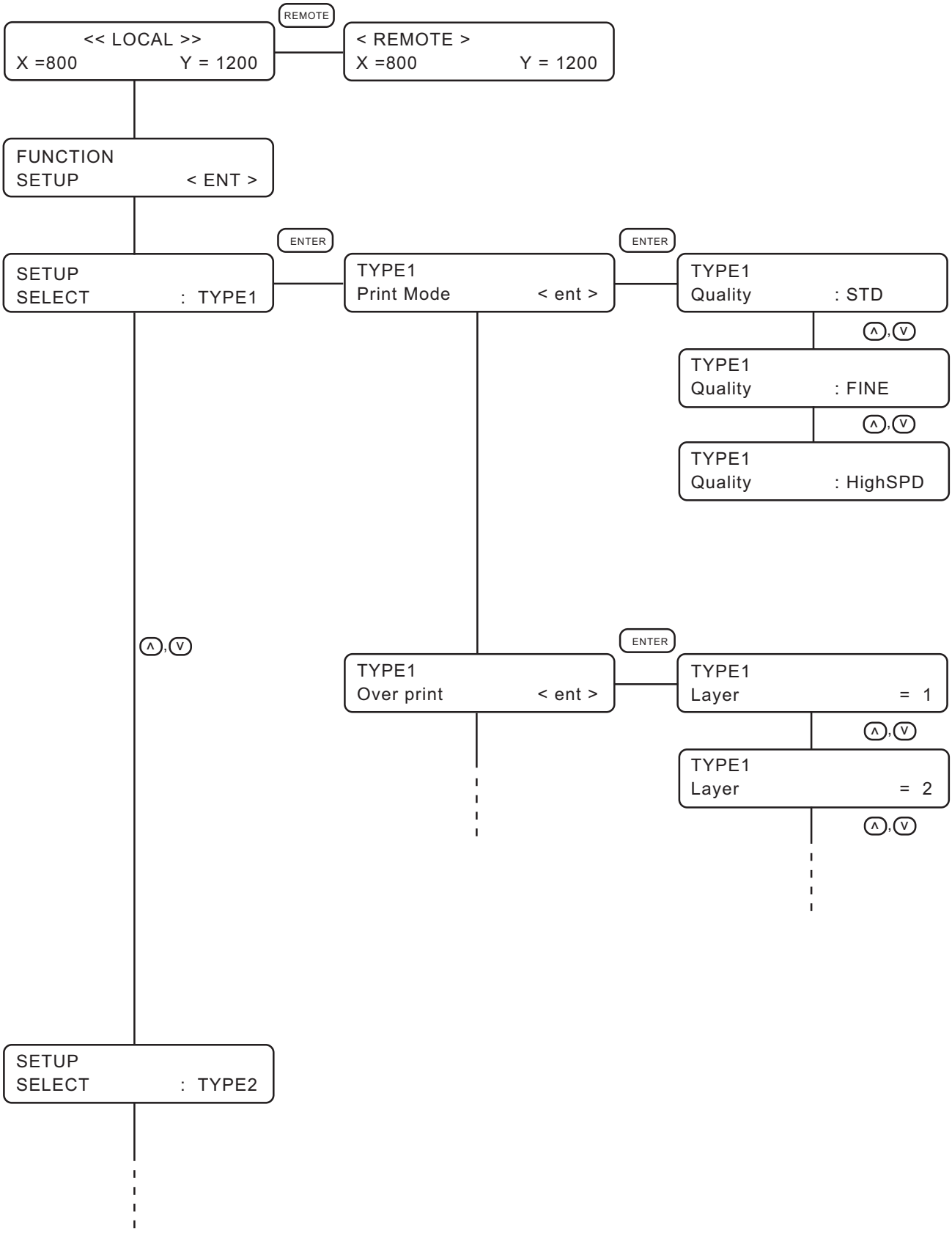

1. Select the LOCAL mode.

Ascertain first that the machine does not perform printing under the REMOTE mode, then press the [REMOTE] key to enter the LOCAL mode.

2. Select the FUNCTION mode.

Press the [FUNCTION] key, and the machine will enter the FUNCTION mode.
The FUNCTION mode is divided into two: the setup function and maintenance function. Select either function.

3. Select a type.

There are four types. The FUNCTION mode can be set for each type depending on the media type used.

4. Select the Function.

Select the function pressing the XY [▲] or [▼] keys.

5. Enter the Function selected.

Press the [ENTER] key.

6. Select a parameter.

Press the XY [▲] or [▼] keys to select a parameter.

7. Enter the specified value.

Press the [ENTER] key.

8. Restore the LOCAL mode.

Press the [END] key several time to restore the LOCAL mode.

Registering a type

The FUNCTION mode enable to regists 4 types.
If the type has been registered for each medium type, it becomes easy to change plotting conditions when the medium type is changed.

STEPS:

1. **Make sure that the mode is LOCAL mode.**

2. **Press the [FUNCTION] key.**

3. **Press the [ENTER] key.**

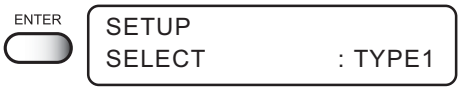

4. **Press the XY [▲] or [▼] keys to select any of types 1 through 4.**

5. **Press the [ENTER] key.**
   Setting Printing Conditions.
   (☞ page 4.5 through 4.7)

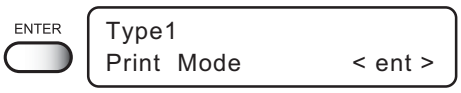

Changing the type

If printing conditions for types 1 through 4 have already been registered, settings can be selected according to the printing simply by selecting the type.

1. **Perform steps 1 through 5 above.**
   Select a type.

2. **Press the [END] key.**
   Printing with the printing condition registered for the selected type is possible.

Setup functions

The FUNCTION mode consists of 14 items.
The following describes the overview of and settings for each function.

Print Mode

Sets the print quality, print direction.

Quality : Select the quality image from three items.

[STD]	:	Standard image quality
[FINE]	:	High image quality and low printing speed
[High SPD]	:	High printing speed and slightly inferior image quality

DIRECTION: Specifies the head movement direction along which printing is made.

[UNI-D]	:	Specifies that printing is made while the head is moving to the left.
[BI-D]	:	Specifies that printing is made while the head is moving to the left and right. This mode allows higher printing speed with a lower print quality than UNI-D.

Return SPD: The unidirectional print within 1000mm width may cause nozzle drop-out. Nozzle drop-out can be solved by head's return at low speed.

[NORMAL]	:	The head returns at normal speed.
[SLOW]	:	Make the head return at low speed.

Overprint

Sets the number of overprinting if ink coloring is poor.

The number of Overprinting : 1 – 9

For nonflammable cloth and silk, do not perform overprinting.
Overprinting will cause the media to expand/contact by ink moisture producing wavy finished surface.

DRYING TIME

It sets the function for drying ink.
The drying time is the wait time by scanning.
Specify the time to be established in accordance with the printing resolution on a printing and the type of work to be used.

Time : 0.0 – 9.9 sec

Sets the time of temporary stop by scanning of the head.

Priority

Specifies whether the values set on the machine (print) are given priority or the values set on the computer (host) are enabled as for the following five functions.

- Print Mode
- Overprint
- Drying Time
- Feed Correct
- Refresh

[HOST] : The printing operation is performed with priority given to the printing conditions set on the computer.

[PLOT] : The printing operation is performed with priority given to the printing conditions set on the machine.

Refresh

Solidification of ink can be prevented by refreshing the head during printing.
If this function is executed in a dusty place or dry place, ink in the head will be likely to solidify.
A larger level results in more number of refreshes.

Number of refreshes : Level 0 – 3

mm/ inch

Set a unit of set values displayed.
When the machine is shipped from the factory, the unit of display is set to “mm” (millimeter).

[mm] : Numerics are expressed in millimeters.

[inch] : Numerics are expressed in inches.

[Offset] : -100 – 100

Auto Clean

The head is cleaned automatically. Perform cleaning for each print to prevent printing failures.

[ON] : The head is cleaned automatically.
[OFF] : The head is not cleaned automatically.

Setup Reset

This function resets the current printing conditions to the factory-set printing conditions. Execute this function for each of the types of set printing conditions.

[ENTER] : All setup is reset.
[END] : End without reset.

Change the display language [DISPLAY]

Display language enable to change Japanese or English. This procedure explains how to change Display language to ENGLISH.

STEPS:

1. **Make sure that the mode is LOCAL mode.**

2. **Press the [FUNCTION] key.**

3. **Press the XY [▼] key twice.**

4. **Press the [ENTER] key.**

5. **Press the XY [▲] or [▼] keys to select the language.**

6. **Press the [ENTER] key.**
   The machine enters the LOCAL mode.

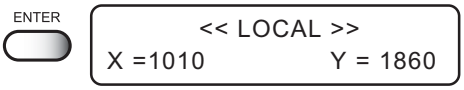

CHAPTER 5
Maintenance

In order to keep the machine in good operating condition, it is necessary to carry out maintenance of the machine periodically.
This chapter introduces special features for correcting poor printing quality and replacing the wipers.

Table of contents

Maintenance of the machine 5.2
Printing setup conditions [LIST] 5.4
Printing HEX CODE [DATA DUMP] 5.5
When medium thickness is changed [Print Adjust] 5.6
Cleaning the station interior [Station]-[Carriage Out] 5.8
When the message
[Replace Wiper] is displayed [Station]-[Wiper Exchng] 5.9
Fill up the ink [Ink Filling] 5.11
Charging ink different from the one in use [Ink Change] 5.12
Displaying the firmware version [INFORMATION] 5.14
Specifying the print head line [Use Head] 5.15
Execute the flushing and cleaning regularly [Routine Control] 5.16

Maintenance of the machine

The term “maintenance” as used herein refers to actions that need to be taken to keep the machine in good operating condition.
To carry out maintenance of the machine, select [MAINTENANCE] from the function menu and make the necessary settings.

Setting the maintenance function

In order to execute any of the maintenance functions, it is necessary to perform the following operation on the operation panel.
You have to understand how to invoke the desired maintenance function to carry out maintenance.

STEPS:

1. **Make sure that the mode is LOCAL mode.**

2. **Press the [FUNCTION] key.**

3. **Press the [▲] or [▼] keys to select [MAINTENANCE].**

4. **Press the [ENTER] key.**

5. **Select the next operation.**
   Set up the desired maintenance function to carry out maintenance. (☞ page 5.3)

Maintenance setup functions

The following describes the overview of and settings for each function.

Name	function	☞
List	Printing the set condition of the machine.	page 5.4
Data Dump	Printing data commands received from the computer, in HEX code.	page 5.5
Print Adjust	Adjust the dot position according to the head height, high/low.	page 5.6
Station	Clean the inside of the station and replace the wiper. (Wiper Exchng, Carriage Out)	page 5.8
Ink Filling	This is not normally used. Perform it when nozzle clogging is still not solved. In addition, when Nozzle cleaning or Storage Wash is performed, this may cause color mixture. Perform it when ejecting mixed color ink.	page 5.11
Ink Change	Changed ink different from the one currently in use.	page 5.12
Information	Display the firmware versions of this machines and an interface.	page 5.14
Routine Ctrl	To set Routine Flushing or Routine Cleaning on/off and interval.	page 5.16
Head To Use	When making printing, using only headline which set this function.	page 5.15

Printing setup conditions [LIST]

This function lists the current settings of the machine.
This is useful in carrying out maintenance of the machine.

1. **SET UP** : Indicates a value that is specified with the FUNCTION.
2. **PRINT adjust** : Indicates a correction value for dot position.
3. **REPLACE COUNTER** : Indicates the number of times the ink cartridges are replaced.
4. **VERSION** : Indicates the version of the firmware and memory capacity of the machine.
5. **PARAMETER** : To be used by customer engineer for maintenance.

CAUTION

- **When the [LIST] function is used to print data commands on paper, use 297mm x 210mm or larger size with the long side set horizontally.**

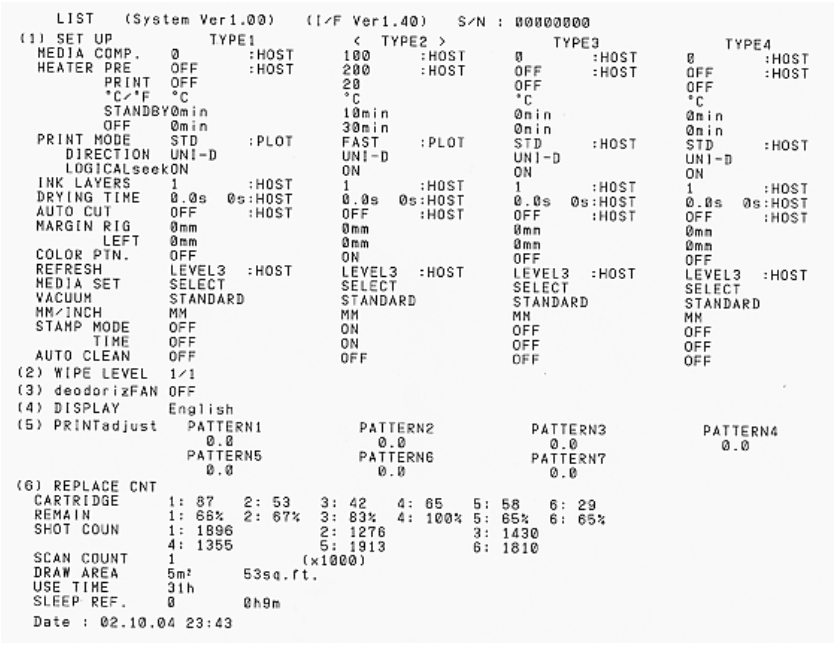

```
    LIST   (System Ver1.00)   (I/F Ver1.40)   S/N : 00000000
(1) SET UP          TYPE1          < TYPE2 >          TYPE3          TYPE4
  MEDIA COMP.    0        :HOST     100      :HOST     0        :HOST     0        :HOST
  HEATER PRE     OFF      :HOST     200      :HOST     OFF      :HOST     OFF      :HOST
         PRINT   OFF                20                 OFF               OFF
         °C/°F   °C                 °C                 °C                °C
         STANDBY 0min               10min              0min              0min
         OFF     0min               30min              0min              0min
  PRINT MODE     STD      :PLOT     FAST     :PLOT     STD      :HOST     STD      :HOST
     DIRECTION   UNI-D              UNI-D              UNI-D             UNI-D
     LOGICALseek ON                 ON                 ON                ON
  INK LAYERS     1        :HOST     1        :HOST     1        :HOST     1        :HOST
  DRYING TIME    0.0s  0s:HOST     0.0s  0s:HOST     0.0s  0s:HOST     0.0s  0s:HOST
  AUTO CUT       OFF      :HOST     OFF      :HOST     OFF      :HOST     OFF      :HOST
  MARGIN RIG     0mm                0mm                0mm               0mm
         LEFT    0mm                0mm                0mm               0mm
  COLOR PTN.     OFF                ON                 OFF               OFF
  REFRESH        LEVEL3   :HOST     LEVEL3   :HOST     LEVEL3   :HOST     LEVEL3   :HOST
  MEDIA SET      SELECT             SELECT             SELECT            SELECT
  VACUUM         STANDARD           STANDARD           STANDARD          STANDARD
  MM/INCH        MM                 MM                 MM                MM
  STAMP MODE     OFF                ON                 OFF               OFF
        TIME     OFF                ON                 OFF               OFF
  AUTO CLEAN     OFF                OFF                OFF               OFF
(2) WIPE LEVEL   1/1
(3) deodorizFAN  OFF
(4) DISPLAY      English
(5) PRINTadjust    PATTERN1          PATTERN2          PATTERN3          PATTERN4
                     0.0               0.0               0.0               0.0
                   PATTERN5          PATTERN6          PATTERN7
                     0.0               0.0               0.0
(6) REPLACE CNT
  CARTRIDGE      1: 87   2: 53   3: 42   4: 65   5: 58   6: 29
  REMAIN         1: 66%  2: 67%  3: 83%  4: 100% 5: 65%  6: 65%
  SHOT COUN      1: 1896         2: 1276         3: 1430
                 4: 1355         5: 1913         6: 1810
  SCAN COUNT     1             (x1000)
  DRAW AREA      5m²     53sq.ft.
  USE TIME       31h
  SLEEP REF.     0       0h9m
  Date : 02.10.04 23:43
```

Printing HEX CODE [DATA DUMP]

This function prints data commands received from the computer, in HEX code.
The HEX code is an alphanumeric representation of printing commands.
By using this code, it is possible to check if there are any abnormal data commands.

CAUTION

- **When the [DATA DUMP] function is used to print data commands on paper, use 297mm x 210mm or larger size with the long side set horizontally.**

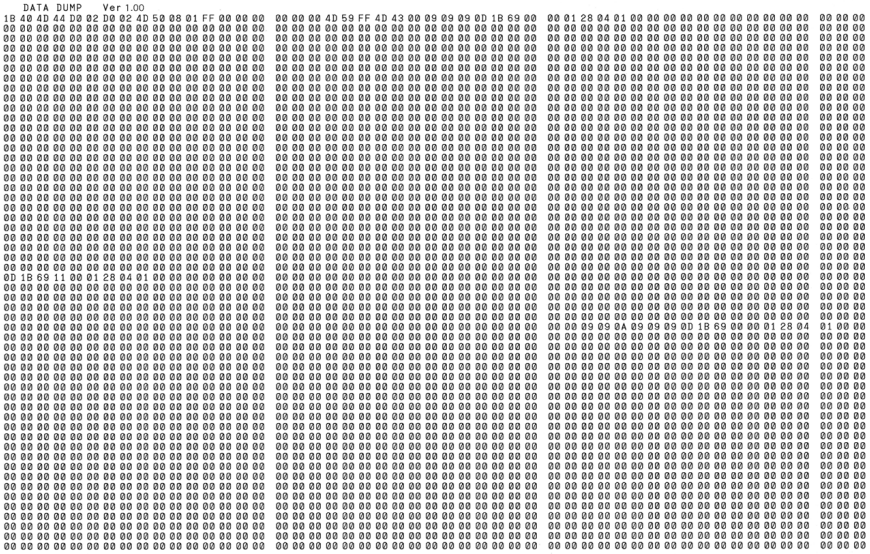

When medium thickness is changed [Print Adjust]

When the head height is adjusted, be sure to correct the dot positions.
This function corrects the dot positions to ensure that the accurate printing result is obtained.
The dot positions are corrected by comparing the ink dropping positions on each of the seven test patterns between the two printing directions.
Always perform Print Adjust (dot position correction) whenever the head height is changed.

STEPS:

1. **Set a sheet of paper, use 297mm x 210mm or larger size with the long side set horizontally, and set the Origin.**

2. **Select the [Print Adjust].**

3. **Press the [ENTER] key.**

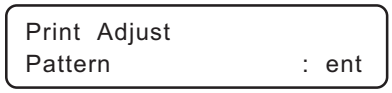

4. **Press the [ENTER] key.**
   Printing of the test patterns for the correction of dot position starts. There are seven types of test patterns that are printed.

5. **Press the XY [▲] or [▼] keys to correct the dot position of pattern 1.**
   The seven test patterns that are output are sequentially named [PATTERN 1] to [PATTERN 7].
   Select the correct dot positions on [PATTERN 1] pressing the XY [▲] or [▼] keys.
   Select the dot positions that make a straight line on the test pattern in the two printing directions.

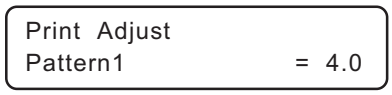

CAUTION

- If the pattern correction value for straight lines is not within -15 through +15, adjust the head height and then correct it again with [Print Adjust].

Select the dot positions 4.0 that make a straight line on the test pattern in two printing direction.

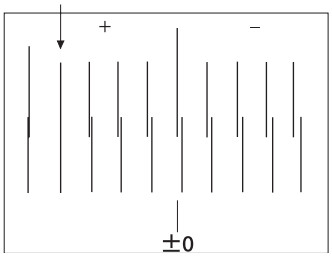

6. Press the [ENTER] key.

```
Print Adjust
Pattern2          = 0.0
```

7. Repeat STEPS 5 and 6 to correct the dot positions on Patterns 2 to 7.

Select the correct dot positions on each of the patterns.

```
Print Adjust
Pattern3          = 0.0
```

```
Print Adjust
Pattern4          = 0.0
```

```
Print Adjust
Pattern5          = 0.0
```

```
Print Adjust
Pattern6          = 0.0
```

```
Print Adjust
Pattern7          = 0.0
```

Enter the dot position correction value on Patterns 1 to 7 and then terminate dot position correction.

```
Print Adjust
Pattern           : ent
```

8. Press the [END] key to complete [Print Adjust].

```
MAINTENANCE
Print Adjust      < ent >
```

9. Press the [END] key twice, and the menu returns to the LOCAL mode.

```
      << LOCAL >>
X =1010        Y = 1860
```

Cleaning the station interior [Station]-[Carriage Out]

Move the carriage when cleaning the station interior and replacing the consumable parts.

CAUTION

- **Do not move the carriage out of the capping station by hand. Use the appropriate operation key to move the carriage.**

STEPS:

1. **Press the [▲] or [▼] keys to select [Station].**

MAINTENANCE
Station < ent>

2. **Press the [ENTER] key.**

Station Maint
Sel : Carriage Out

3. **Press the [ENTER] key.**

Carriage Out
Completed : ent

4. **Open the station cover, then perform the following maintenance works for the station interior.**

1. Cleaning the ink caps. (☞ page 3.4)
2. Cleaning the wiper. (☞ page 3.4)
3. Cleaning the ink at the bottom of the slider. (☞ page 3.3)
4. Replacing the flushing tray ink absorber. (☞ page 3.10)
5. Changing the wiper. (☞ page 5.9)
   When the message [Replace Wiper] is displayed on the LCD, replace the wiper.

5. **Close the station cover, then press the [ENTER] key.**

Initialize
Please Wait

6. **The machine enters the LOCAL mode.**

<< LOCAL >>
X =1010 Y = 1860

When the message [Replace Wiper] is displayed [Station]-[Wiper Exchng]

The wipers are consumable parts. When the following message is displayed, replace the wipers with new ones.

```
Wiper
Replace  Wiper
```

CAUTION

- **Do not press the [ENTER] key other than the case of replacing wipers. The number of wiper operations that is counted in the machine will be reset.**
  Do not select [Wiper Exchng] unless the wiper is to be really changed.

STEPS:

1. **Press the [▲] or [▼] keys to select [Station].**

```
MAINTENANCE
Station                < ent >
```

2. **Press the [ENTER] key.**

```
Station Maint
Sel          : Carriage Out
```

3. **Press the [▲] or [▼] keys to select [Wiper Excng].**

```
Station Maint
Sel          : Wiper Exchng
```

4. **Press the [ENTER] key.**
   The wiper moves toward you and the carriage moves away from the station.

```
Wiper Exchange
Completed              : ent
```

5 **Open the station cover.**

6. **Holding the projections at both ends, draw out the wiper.**
   Use the gloves that are supplied with the separately-available clean wiper to protect your hands from stains.

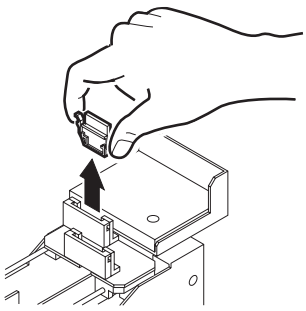

7. Holding the projections at both ends, insert a new wiper into place.

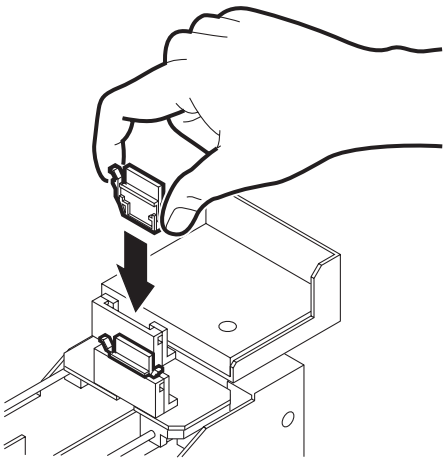

CAUTION

- Contacting the rubber portion of a new wiper shall be avoided. It can cause the nozzle to be clogged.
- Insert the wiper so that its felt side surface is placed on the left as viewed from your position.

8. Clean the wiper guide shaft using a cotton bud or cloth.

If dirt is hard to remove, use a cotton bud of cloth dampened with water.

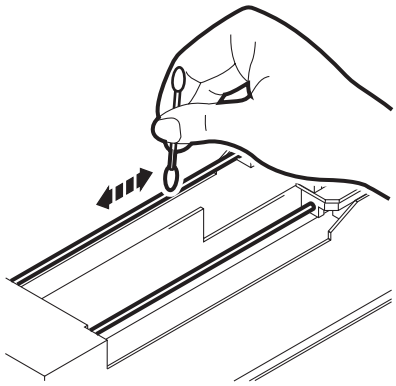

CAUTION

- Cleaning the wiper guide shaft.
  (☞ page 3.4)
  Extremely dirty wiper guide shaft may cause operation failure of the wiper, resulting in error display.

9. Check the flashing tray ink absorber. Replace if ink is found on the ink absorber.
(☞ page 3.10)

10. Close the station cover, then press the [ENTER] key.

```
Initialize
Please  Wait
```

11. The machine enters the LOCAL mode.

```
<< LOCAL >>
X =1010          Y = 1860
```

Fill up the ink [Ink Filling]

Perform the [Storage Wash] function for nozzle clogging when head cleaning or [Nozzle cleaning] does not work.
In addition, when the [Nozzle cleaning] function or the [Storage Wash] function is performed, this may cause color mixture.
Perform the [Ink Filling] function to discharge mixed color ink.

STEPS:

1. **Make sure that the FUNCTION mode is displayed.**

2. **Press the [▲] or [▼] keys to select [MAINTENANCE].**

3. **Press the [ENTER] key.**

4. **Press the [▲] or [▼] keys to select [Ink Filling].**

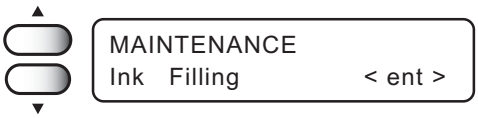

5. **Press the [ENTER] key.**

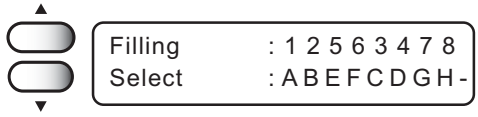

6. **Press the XY [◀] or [▶] keys to select a head with no ink.**

7. **Press the XY [▲] or [▼] keys to indicate a head with no ink by [----].**
   1256/3478/ABEF/CDGH

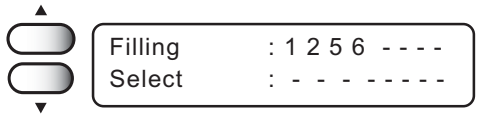

8. **Press the [ENTER] key.**

9. **When filling up some ink, back to STEP 4.**

Charging ink different from the one in use [Ink Change]

The Ink Change function charges ink different from the one currently in use. When the same type of ink as is set in the ink station is to be used, it is unnecessary to execute this function.

- **Be sure to use the inks and ink cartridges specified by MIMAKI. Please be noted that MIMAKI shall have no liability for any trouble that arises when using any ink cartridge or ink other than the genuine MIMAKI brand ones.**
- **For ink replacement, please purchase the optional Washing Liquid cartridge (for water base ink) in advance.**
- **Before replacing ink, empty out the waste ink tank.**

STEPS:

1. **Make sure that the FUNCTION mode is displayed.**

```
FUNCTION
SETUP                < ENT >
```

2. **Press the [▲] and [▼] key to select the [MAINTENANCE].**

```
FUNCTION
MAINTENANCE          < ENT >
```

3. **Press the [ENTER] key.**

```
MAINTENANCE
List                 < ent >
```

4. **Press the XY keys [▲] or [▼] to select [Ink Change] .**

```
MAINTENANCE
Ink  Change          < ent >
```

5. **Press the [ENTER] key.**

```
Change      : 1 2 5 6 3 4 7 8
Select      : A B E F C D G H -
```

6. **Press the XY keys [◀] or [▶] to select a cartridge which does not be exchanged.**

```
Change      : 1 2 5 6 3 4 7 8
Select      : A B E F C D G H -
```

7. **Press the [ENTER] key.**

```
Remove  Cartridge
1 2 5 6 3 4 7 8  ABEFCDGH
```

8. **Take out the changing ink cartridge from the ink station.**
   Discharge of the filled ink is started.
   It displays the remaining run-time.

```
Washing                 1/5
                  00: ** : **
```

9. Install the washing liquid cartridge.

Load the washing liquid cartridge at the position of the ink discharged in step 8. Washing is started automatically.

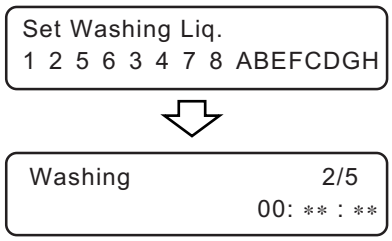

10. Take out the washing liquid cartridge from the ink station.

Discharge of the washing liquid is started.

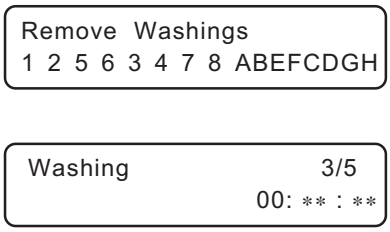

11. Repeat STEPS 8 and 9.

12. Install new ink cartridges.

Insert ink cartridges in the ink stations. The ink type for each ink station is displayed.

[TPig] : Pigment ink for textile
[Acid] : Acid dye ink
[Reac] : Reactive dye ink
[Disp] : Disperse dye ink

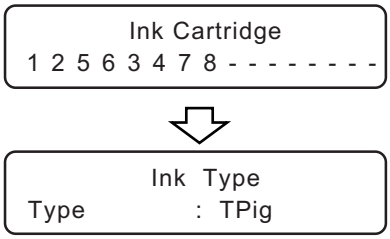

13. Press the XY keys [▲] or [▼] to set the ink type to filling .

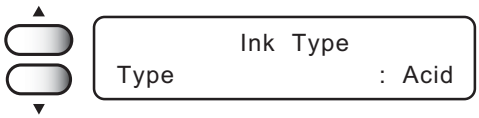

15. Press the [ENTER] key, and filling of ink is started automatically.

It displays the remaining run-time.

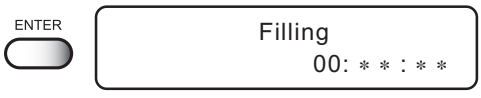

16. When filling of ink is completed, the machine returns to the LOCAL mode.

Displaying the firmware version [INFORMATION]

Display the firmware versions of this machines and an interface.
If trouble occurs, please inform the dealer or MIMAKI sales office of the contents of the trouble as well as this information.

STEPS:

1. **Make sure that the FUNCTION mode is displayed.**

2. **Press the [▲] or [▼] keys to select the [MAINTENANCE].**

3. **Press the [ENTER] key.**

4. **Press the [▲] or [▼] keys to select the [Information].**

5. **Press the [ENTER] key.**

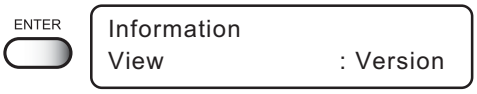

6. **Select [Version], then press the [ENTER] key.**

7. **Press the [END] key for times, and the menu returns to the LOCAL mode.**

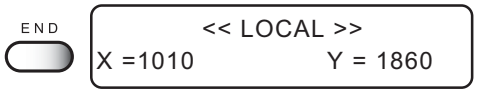

Specifying the print head line [Use Head]

Use this function if nozzle missing cannot be recovered even after repetitive cleaning or if plotting with higher quality is required. Divide the 16 (4x4) nozzles in the carriage into four horizontal rows to specify the print headline.
Head line 3.4 is the head for a discharge liquid and unable to be specified.

STEPS:

1. **Press the [▲] or [▼] keys to select [Use Head].**

```
MAINTENANCE
Use Head              < ent >
```

2. **Press the [ENTER] key.**

```
Use Head
Head Line             :L 12
```

3. **Press the XY [▲] or [▼] keys to select the use head.**

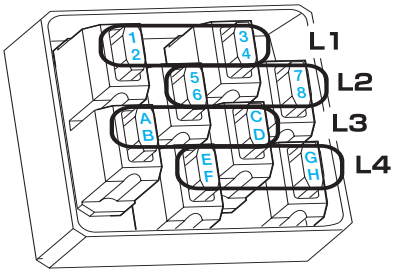

```
Use Head
Head Line             :L1234
Head Line             :L–234
Head Line             :L123–
Head Line             :L––34
Head Line             :L–23–
Head Line             :L–––4
Head Line             :L––3–
Head Line             :L–2––
Head Line             :L1–––
```

4. **Press the [ENTER] key.**

5. **Press the XY [▲] or [▼] keys to select the ink type.**

```
Use Head
Ink Type              :  TPig
Ink Type              :  Acid
Ink Type              :  Reac
Ink Type              :  Disp
```

[TPig] : Pigment ink for textile
[Acid] : Acid dye ink
[Reac] : Reactive dye ink
[Disp] : Disperse dye ink

6. **Press the [ENTER] key.**

```
MAINTENANCE
Use Head              < ent >
```

7. **Press the [END] key twice, and the menu returns to the LOCAL mode.**

```
          << LOCAL >>
X =1010          Y = 1860
```

CAUTION

- **Mixed use with TPig ink and dye ink**
  Assign the TPig ink at the back side of the carriage. It enables to perform the head cleaning easily.

Execute the flushing and cleaning regularly [Routine Control]

This function allows for the pigment ink for textile (TPig).
Set time limits on the flushing and cleaning functions at regular time intervals to avoid nozzle clogging and clean off dust on the nozzle surface.

Routine Flushing

The routine flushing function is executed with the power on.
Time set by the hour is available for 1 to 24 hrs with this function turns on.

STEPS:

1. **Make sure that the FUNCTION mode is displayed.**

2. **Press the [▲] or [▼] keys to select [MAINTENANCE].**

3. **Press the [ENTER] key.**

4. **Press the [▲] or [▼] keys to select [Routine Ctrl].**

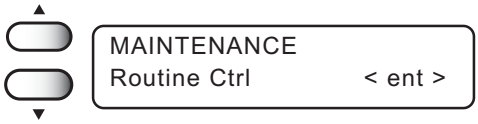

5. **Press the [ENTER] key.**

6. **Select [Routine Flushing], then press the [ENTER] key.**

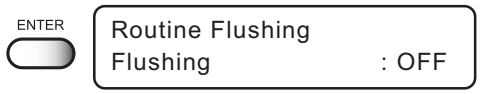

7. **Press the [▲] or [▼] keys to select [ON].**

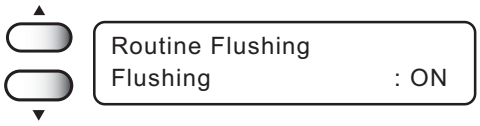

8. **Press the [ENTER] key.**

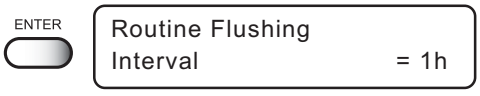

9. **Press the [▲] or [▼] keys, and select time interval.**

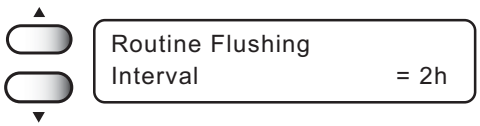

10. **Press the [ENTER] key.**

Routine Cleaning

The routine cleaning function is executed with the power on.
Time set by the hour is available for 1 to 48 hrs with this function turns on.

STEPS:

1. **Make sure that the FUNCTION mode is displayed.**

2. **Press the [▲] or [▼] keys to select [MAINTENANCE].**

3. **Press the [ENTER] key.**

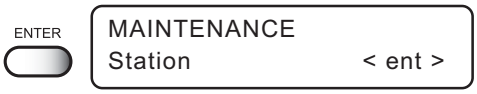

4. **Press the [▲] or [▼] keys to select [Routine Ctrl].**

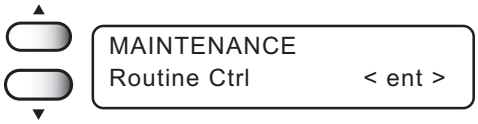

5. **Press the [ENTER] key.**

6. **Select [Routine Cleaning], then press the [ENTER] key.**

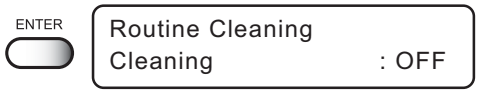

7. **Press the [▲] or [▼] keys to select [ON].**

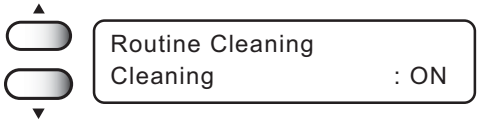

8. **Press the [ENTER] key.**

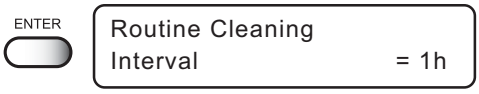

9. **Press the [▲] or [▼] keys, and select time interval.**

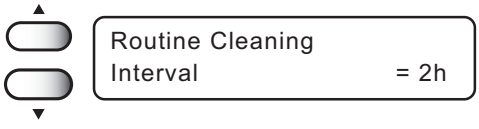

10. **Press the [ENTER] key.**

CHAPTER 6
When Abnormal Conditions Are Encountered

Chapter 6 describes corrective measures to be taken in the case where an to be taken in case an abnormal condition arises and an error message appears on the display.

Table of contents

Abnormal conditions where no error massage appears 6.2
If image quality declines 6.3
Problems where error messages are given on the LCD 6.4

Abnormal conditions where no error massage appears

Corrective measures for problems where no error message is given on the LCD are described in this section. Be sure to take the following measures before contacting MIMAKI. If the measures fail to fix the machine, contact your local MIMAKI distributor or MIMAKI office for service.

The machine cannot be energized

More often than not, this is due to improper connection of the power cable. Check that the power cable has been properly connected to the power outlet and the computer.

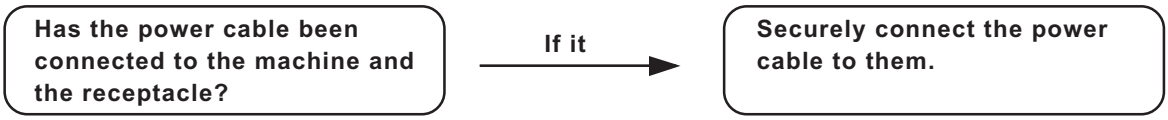

The machine cannot perform printing

This occurs when the data is not being transmitted to the machine properly. It can also occur when any of the machine functions fails or the medium has been set improperly.

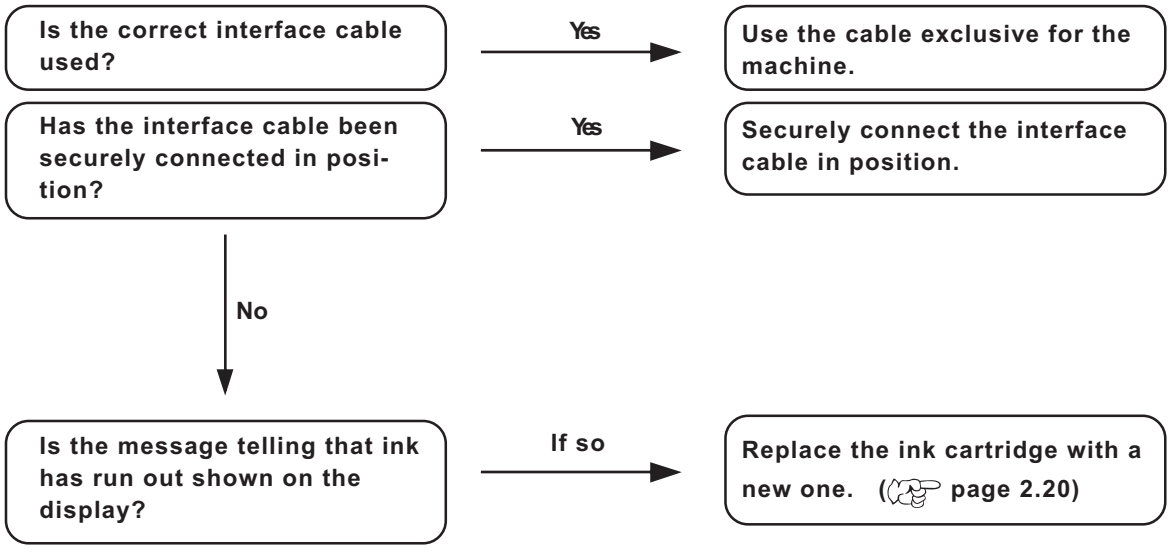

If image quality declines

Corrective measures against problems where satisfactory image quality is not provided are described in this station. Take measures in accordance with actual state of the picture.
If the measures fail fix the machine, contact your local MIMAKI distributor or MIMAKI office call for service.

While lines/thin spots are obvious or dark stripes occur (In the direction of travel of the head)

Corrective measure : Clean the head. (☞ page 2.10)
Corrective measure : Clean the interior of the station. (☞ page 5.8)
Corrective measure : Conduct the [Feed Correct] function. (☞ page 2.13)
Corrective measure : If slip of paper is present in the head path, for example, above the work plate, remove it.

Characters fluctuate doubly or triply into paper feed

Corrective measure : Conduct the [Feed Correct] function. (☞ page 2.13)

Displacement is observed between outward and inward printing /The respective color ink injected by the respective color heads do not properly overlap

Corrective measure : Adjust “Y (outward and inward)” in [Print Adjust] function. (☞ page 5.6)

Large ink drop on medium

Corrective measure :
1. Clean the wiper. (☞ page 3.4)
2. Clean the ink caps. (☞ page 3.4)
3. Clean the bottom of the slider. (☞ page 3.3)
4. Execute the head cleaning [normal]. (☞ page 2.10)
5. If ink drop occurs again over time, perform Head cleaning [Hard]. (☞ page 2.10)
6. Dust the work.
7. Dust the table.

Become lighter during the printing and then printing without ink

Corrective measure : Reduce the printing density by resetting the RIP setting or remaking the data.

Some strip streaks occur on the image with narrow print width

Corrective measure : Set the head return speed, SLOW. (☞ page 4.5)

Problems where error messages are given on the LCD

If something is wrong with the machine, the buzzer sounds and a corresponding error message is given on the LCD.
Take an appropriate corrective measure in accordance with the message.

Errors accompanied by warnings

These errors arise on the ink-related components.

Warning message	Cause	Corrective measure
Ink Cartridge 1 2 3 4 5 6 7 8 A B C D E F G H	Ink cartridge is not loaded on the ink station.	Attach the ink cartridge(s) corresponding with the number(s) shown on the display.
Ink Near End 1 2 3 4 5 6 7 8 A B C D E F G H	The amount of ink remaining in the ink cartridge is insufficient.	Printing can continue by pressing the [REMOTE] key. However, it is recommended that you replace the ink cartridge is shown on the LCD with a new one.
Ink End 1 2 3 4 5 6 7 8 A B C D E F G H	The ink cartridge has run out of ink.	Replace the ink cartridge shown on the LCD with a new one.
Ink Low 1 2 3 4 5 6 7 8 A B C D E F G H	Not enough ink for cleaning.	Replace the ink cartridge of the displayed number before cleaning.
Wiper Replace Wiper	Time to replace the wiper in the capping station with a new one has come and clean the bottom of the slider.	Printing will be enabled by pressing the [REMOTE]. Then, the error message will not appear until the power is returned on. It is recommended, however, to replace the wiper with a new one as soon as possible.
Wiper Clean Wiper Shaft	The wiper guide shaft is dirty.	Clean the wiper guide shaft.
Waste Ink Tank No Ink Tank	The waste ink tank cannot be found.	Set the waste ink tank correctly.
Waste Ink Tank Ink Tank Is Full	Waste ink tank is full.	Remove the waste ink tank and set an empty waste ink tank.
Waste Ink Tank Ink Tank Near Full	Waste ink tank will soon full.	

Warning message	Cause	Corrective measure
Unidentified Ink 1 2 3 4 5 6 7 8 A B C D E F G H	The loaded ink cartridge is not MIMAKI genuine.	Use the ink specified by MIMAKI.
Ink Limit 1 2 3 4 5 6 7 8 A B C D E F G H	The ink cartridge will expire soon or has expired.	Printing can be continued in file by-file basis by pressing the [REMOTE] key. However, it is recommended that you replace the ink cartridge is shown on the LCD with a new one.
Ink Color 1 2 3 4 5 6 7 8 A B C D E F G H	The color of the loaded ink cartridge is different from the previous one.	Check the color of the loaded ink cartridge.
Ink Type 1 2 3 4 5 6 7 8 A B C D E F G H	The type of the loaded ink cartridge is different from the previous one.	Check the type of the loaded ink cartridge.
Ink IC Error 1 2 3 4 5 6 7 8 A B C D E F G H	The IC chip of the ink cartridge cannot be read normally.	Attach the ink cartridge(s) corresponding with the color shown on the display. If the same error message appears again on the LCD, contact your local distributor to call for service.
Ink Count Error 1 2 3 4 5 6 7 8 A B C D E F G H	The loaded ink cartridge is defective.	Check the loaded ink cartridge.
Head Height Check HeadHeight	The head height is incorrect.	Correct the head height.
Check Stop SW or Station Cover	The station cover is open or the stop switch is pressed.	Close the station cover or release the stop switch.
Service Call 001 Service Call 002	Time to replace regularly replaceable parts.	Contact your local MIMAKI distributor or call a local MIMAKI office for services. The parts may be used until new parts are delivered.
TPig ERROR 1 2 3 4 5 6 7 8 A B C D E F G H	TPig ink has been set at the front side of the carriage in the initial setting of mixed inks.	Set the TPig ink at the back side of the carriage.

Warning message	Cause	Corrective measure
Below Operable Temperature	Temperature is below operable condition.	Adjust environmental temperature.
Temperature Evn. Temp is Low	Temperature is below guaranteed.	
Temperature Evn. Temp is High	Temperature is over below guaranteed.	

Error messages

Error messages contain error numbers.

If any error message is given on the LCD, turn off the power to the machine for while and turn it back on.

If the same error message appears again on the LCD, contact your local MIMAKI distributor or MIMAKI office to call for service.

Warning message	Cause	Corrective measure
ERROR 01 MAIN ROM ERROR 02 MAIN RAM	Control circuit board is defective.	Turn off the power to the machine for while and turn it back on. If the same error message appears again on the LCD, contact your local distributor to call for service.
ERROR 03 POWER +5V ERROR 03 POWER +35V	Control circuit board is defective. POWER+5V POWER+35V	
ERROR 04 FRASH ROM ERROR 06 D-RAM	Control circuit board is defective.	
ERROR 07 TEMP (0000)	Head connection failure is detected.	
ERROR 08 ENCODER	Trouble with detection of linear encoder.	
ERROR 09 FPGA ERROR 19 HDC	Control circuit board is defective. FPGA Error HDC Error	
ERROR 10 COMMAND	The device has received data other than command data. The interface cable used is not in conformance with this plotter.	Securely connect the interface cable in position. Use an interface cable in conformance with the standard.

Warning message	Cause	Corrective measure
ERROR 11 PARAMETER	A parameter outside the range of acceptable numeric values is received.	Check the host computer output setting.
ERROR 14 COLOR COMMAND	Strange color data has been received.	
ERROR 20 I / F BOARD	Improper operation has been conducted on the operation panel.	Turn off the power to the machine for a while and then turn it on. If the same error message appears again on the LCD, contact your local distributor for service.
ERROR 21 THERE IS NO I / F	No I/F board is attached to the control board.	
ERROR 23 HOST I / F	HOST I/F Timeout error has arisen during communication between the host computer and interface board.	Check to be sure that the cable is securely connected to the host computer and interface board. Also, check to ascertain that no error has arisen on the host computer side.
ERROR 24 I / F INITIAL	Initial operation failure of the I/F board and control board.	Turn off the power to the machine for a while and then turn it on. If the same error message appears again on the LCD, contact your local distributor for service.
ERROR 30 OPERATION	An error occurs on the interface between the I/F board and the control board.	Perform a proper operation.
ERROR 34 DATA REMAIN	Settings for functions have been changed to be changed though there remains received data that has not yet been printed.	Print all pieces of received data or execute the data clear function. Then, change the settings.
ERROR 40 MOTOR X	The Xmotor has been overload.	Turn off the power to the machine for a while and then turn it on. If the same error message appears again on the LCD, contact your local distributor to call for service.
ERROR 41 MOTOR Y	The Ymotor has been overload.	
ERROR 42 X OVERCURRENT	Overcurrent error on the Xmotor has been detected.	
ERROR 43 Y OVERCURRENT	Overcurrent error on the Ymotor has been detected.	
ERROR 45 CAPPING	Incorrect height of the capping station has been detected.	

Warning message	Cause	Corrective measure
ERROR 46 WIPER	The wiper position is not correct.	Turn off the power to the machine for a while and then turn it on. If the same error message appears again on the LCD, contact your local distributor for service.
ERROR 51 ORIGIN DETECTION	Origin could not be detected.	

APPENDIX

This appendix describes the specifications of the machine and components and the structure of the function menu.

Table of contents

Basic specifications A.2
Ink specification A.4
Consumable items A.5
Location of safety labels A.6
Function flowchart A.9

Basic specifications

Item		GP-1810
Printing head	Method	Piezo-electric drop-on demand
	Specification	8-heads (2 x 4 lines)
	Nozzle	4 colors x 720 nozzles
	Resolution	360, 540, 720 dpi
Drawing mode		360 x 360 dpi : 2 / 4 / 8 passes, Unidirection / bidirection 360 x 540 dpi : 3 / 6 / 12 passes, Unidirection / bidirection 360 x 720 dpi : 4 / 8 / 16 passes, Unidirection / bidirection 720 x 720 dpi : 4 / 8 / 16 passes, Unidirection / bidirection
Usable ink		Pigment Ink for Textile (MIMAKI original ink) Acid Dye Ink (MIMAKI original ink) Reactive Dye Ink (MIMAKI original ink) Disperse Dye Ink (MIMAKI original ink)
Ink set		each color 4 cartridges
Delivery system of ink		Supplies ink through a tube from ink cartridge Remaining ink display function (IC mounted) Ink end detecting function Ink cartridge replacement system
Capacity of ink cartridge		220 cc ± 10 cc per cartridge x 4 cartridge About 200 cc for each cartridge variable
Medium type		Sewn clothes (T-shirts, etc.), sheet-like works (cloth, canvas, PET, synthetic paper, etc.)
Work size	Max. printing area	1860 x 1010 mm
	Max. setting size	1870 x 1050 mm
	Thickness	50 mm or less
	Weight	60kg or less when load is evenly distributed
Distance accuracy	Absolute accuracy	Whichever the larger one of ± 0.3 mm or ±0.15 % of the designated
	Reproducibility	Whichever the larger one of ± 0.2 mm or ±0.05 % of the designated
Perpendicularity		± 0.5 mm / 1000 mm
Head height adjustment		1.3 – 51.3 mm variable from the table
Waste ink tank		Bottle type (5,500 cc / with tank full sensor)
Interface		IEEE1284 compliant, IEEE1394 compliant
Command		MRL-II (ESC/PV.2 base, MIMAKI original command)
Noise		during standby : Less than 55 dB (FAST-A, Front & Rear & Left & Right 1 m) during continuous printing : Less than 70 dB during discontinuous printing : Less than 70 dB
Safety Standard		VCCI-classA, FCC-classA, CBreport CE marking (EMC Directive, low-voltage Directive), ETL/cETL

Item		GP-1810
Power		AC 200 – 240 V± 10% (Auto voltage), 50/60 Hz ± 1 Hz
Power consumption		500VA
Recomended Environment	Available temp.	15 °C – 30 °C
	Humidity	40 – 65 % Rh (No condensation)
	Guaranteed temp.	18 °C – 25 °C
	Temperature change	± 10 °C / h or less
	Dust	Equivalent to normal office level
Weight		650 Kg
Outside dimensions		3070 (W) x 2210 (D) x 1350 (H) mm or less

Leser sensor unit specifications

Item	Specifications
Type	JIS/IEC Class I Laser Product
Maximum output	3.0mW
Wave length	650nm

Ink specification

Item	Specifications
Form	Exclusive ink cartridge
Type	Pigment ink for Textile / SPC-0350 series (K, M, C, Y) Acid dye ink / SPC-0355 series (K, M, C, Y) Disperse dye ink / SPC-0356 series (K, M, C, Y) Reactive dye ink / SPC-0357 series (K, M, C, Y)
Contents of ink	210 to 220 cc per cartridge
Shelf life	Varies by the ink type. Within three months after opening the package
Storage temperature	During storage : -30 – 40°C (Storage at temperature of 40°C is permitted within a month.) During : -30 – 60°C (Storage at temperature of 60°C is only permitted within 120 hours, and at temperature of 40°C is permitted within a month.)

- **The ink will freeze when it is left for a long time under temperature below -4°C. Should it freeze, leave the ink cartridge at room temperature (at 25°C) for three hours or more to allow the ink to thaw.**
- **Do not disassemble or refill the ink cartridge.**

CAUTION

- **Pigment ink for textile (TPig) dries easily. If the nozzle face, wiper and cap get dried, it may cause nozzle-out and deflection. To prevent from those troubles, use it under more than humidity 40%.**

Consumable items

Consumable items listed below must be renewed at regular intervals to maintain adequate printing quality. Contact your local MIMAKI distributor or call a local MIMAKI office for services.

Wiper	**4pcs**	**: Order No. SPA-0105**
Ink absorber for the flushing tray	**100pcs**	**: Order No. M-3**
Cotton swabs	**10pcs**	**: Wooden axis(S) cotton swab 6”**

Location of safety labels

The following safety labels (10 kinds and 15 labels in total) have been attached to this machine. If any of them fall off or become illegible, contact MIMAKI local distributor for a replacement.
All persons who install, operate and maintain this machine should understand and follow the safety precautions in these labels. Failure to do so can result in serious injury.

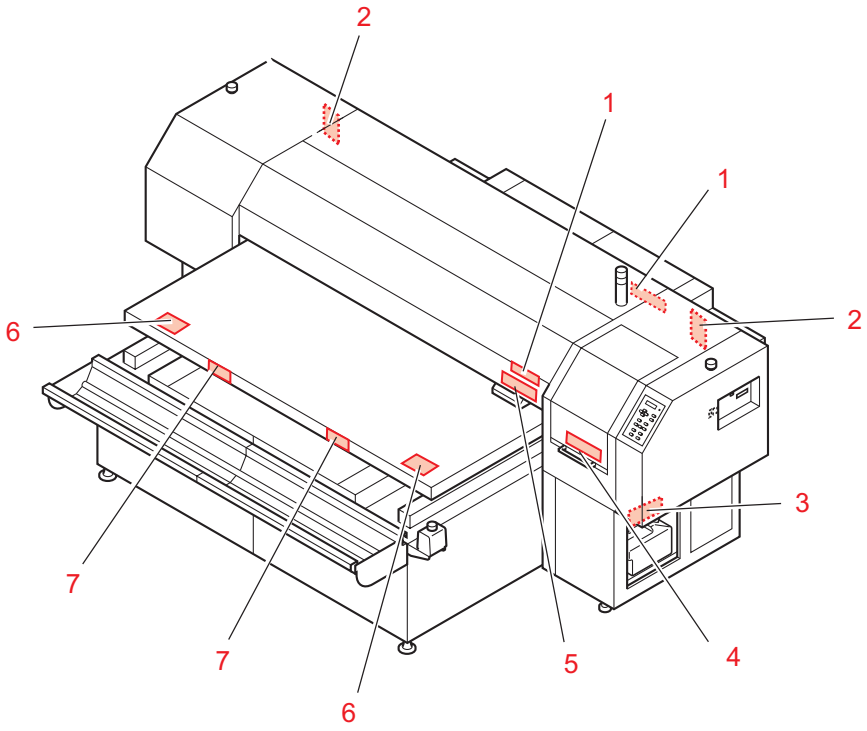

No.	Order No.	Label
1	M903968	
2	LHDM-04 (Japanese) PED-04 (English)	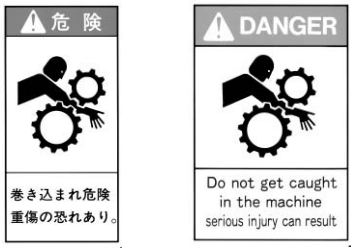
3	M901469	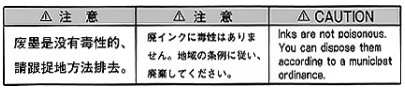
4	M901607	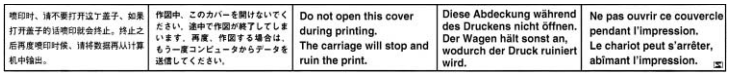
5	M901549	
6	M903226 (Japanese) M904325 (English)	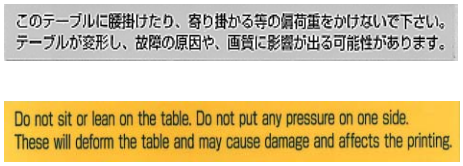
7	LHCM-02 (Japanese) PEC-02 (English)	

Function flowchart

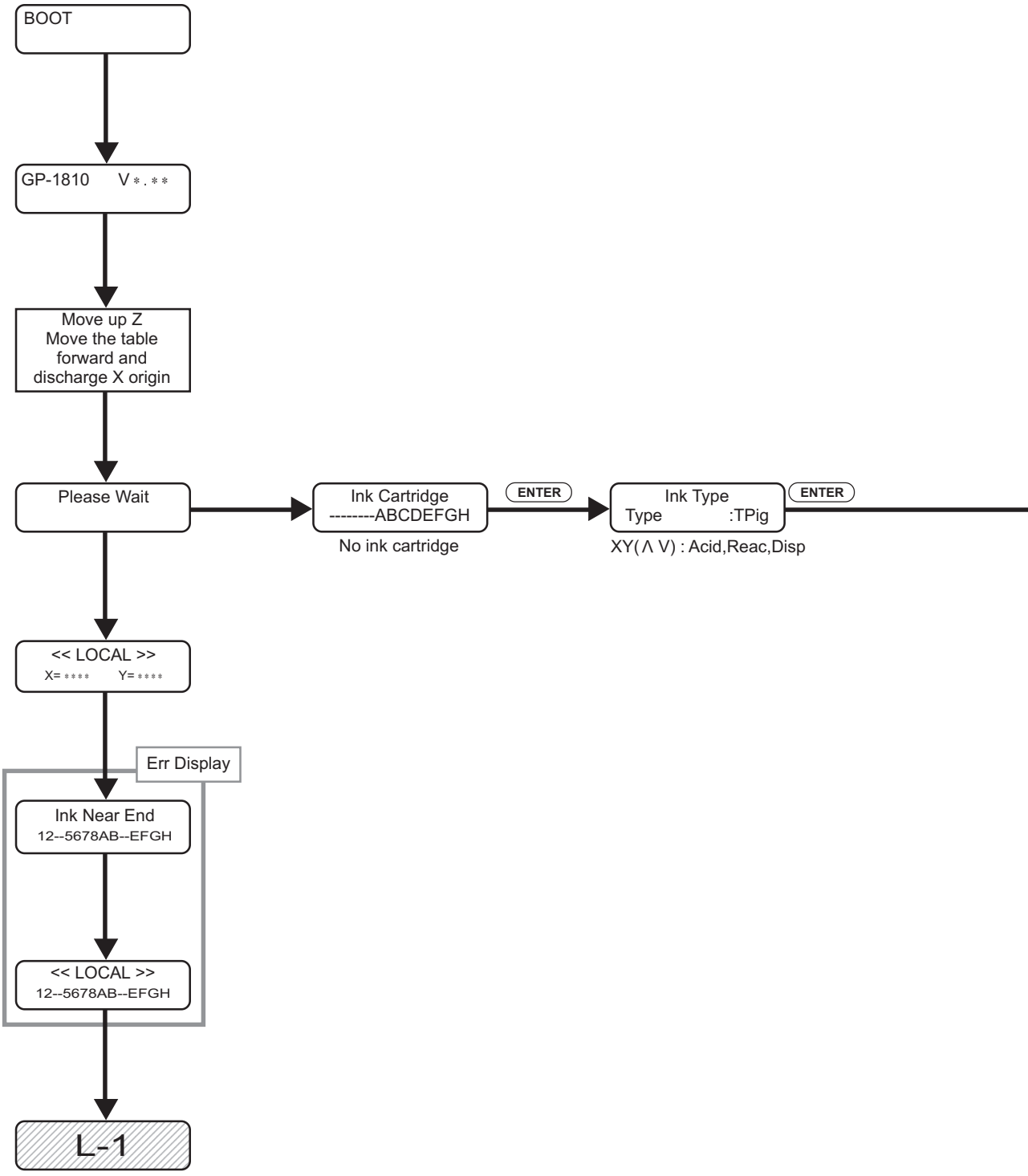
BOOT
GP-1810 V*.**
Move up Z
Move the table
forward and
discharge X origin
Please Wait
Ink Cartridge
--------ABCDEFGH
ENTER
No ink cartridge
Ink Type
Type :TPig
ENTER
XY(Λ V) : Acid,Reac,Disp
<< LOCAL >>
X=**** Y=****
Err Display
Ink Near End
12--5678AB--EFGH
<< LOCAL >>
12--5678AB--EFGH
L-1

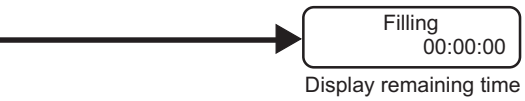

Display remaining time

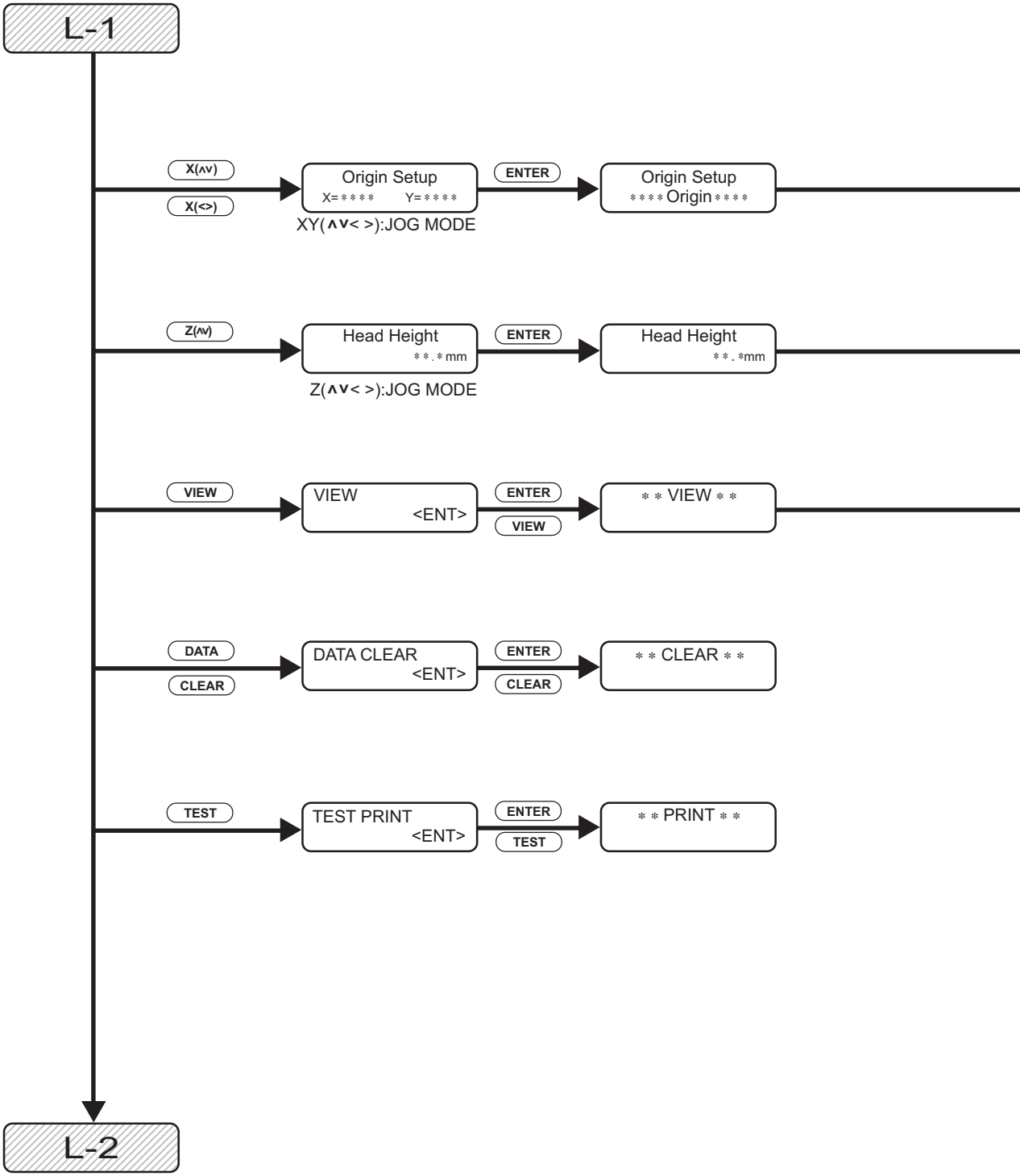
L-1
X(∧v)
X(<>)
Origin Setup
X=＊＊＊＊ Y=＊＊＊＊
ENTER
Origin Setup
＊＊＊＊Origin＊＊＊＊
XY(∧v< >):JOG MODE
Z(∧v)
Head Height
＊＊.＊mm
ENTER
Head Height
＊＊.＊mm
Z(∧v< >):JOG MODE
VIEW
VIEW
<ENT>
ENTER
VIEW
＊＊ VIEW ＊＊
DATA
CLEAR
DATA CLEAR
<ENT>
ENTER
CLEAR
＊＊ CLEAR ＊＊
TEST
TEST PRINT
<ENT>
ENTER
TEST
＊＊ PRINT ＊＊
L-2

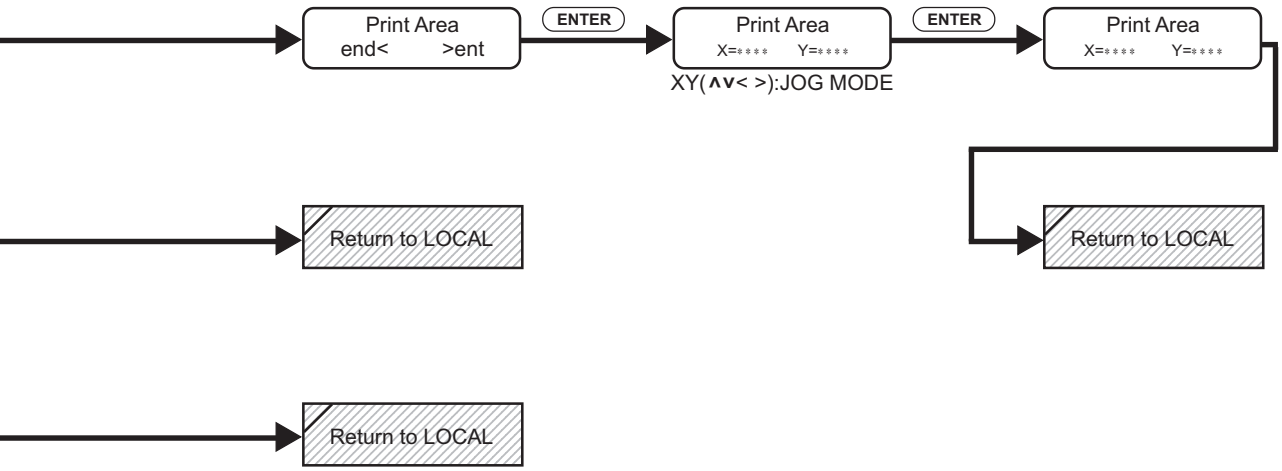
Print Area
end< >ent
ENTER
Print Area
X=**** Y=****
ENTER
Print Area
X=**** Y=****
XY(∧∨< >):JOG MODE
Return to LOCAL
Return to LOCAL
Return to LOCAL

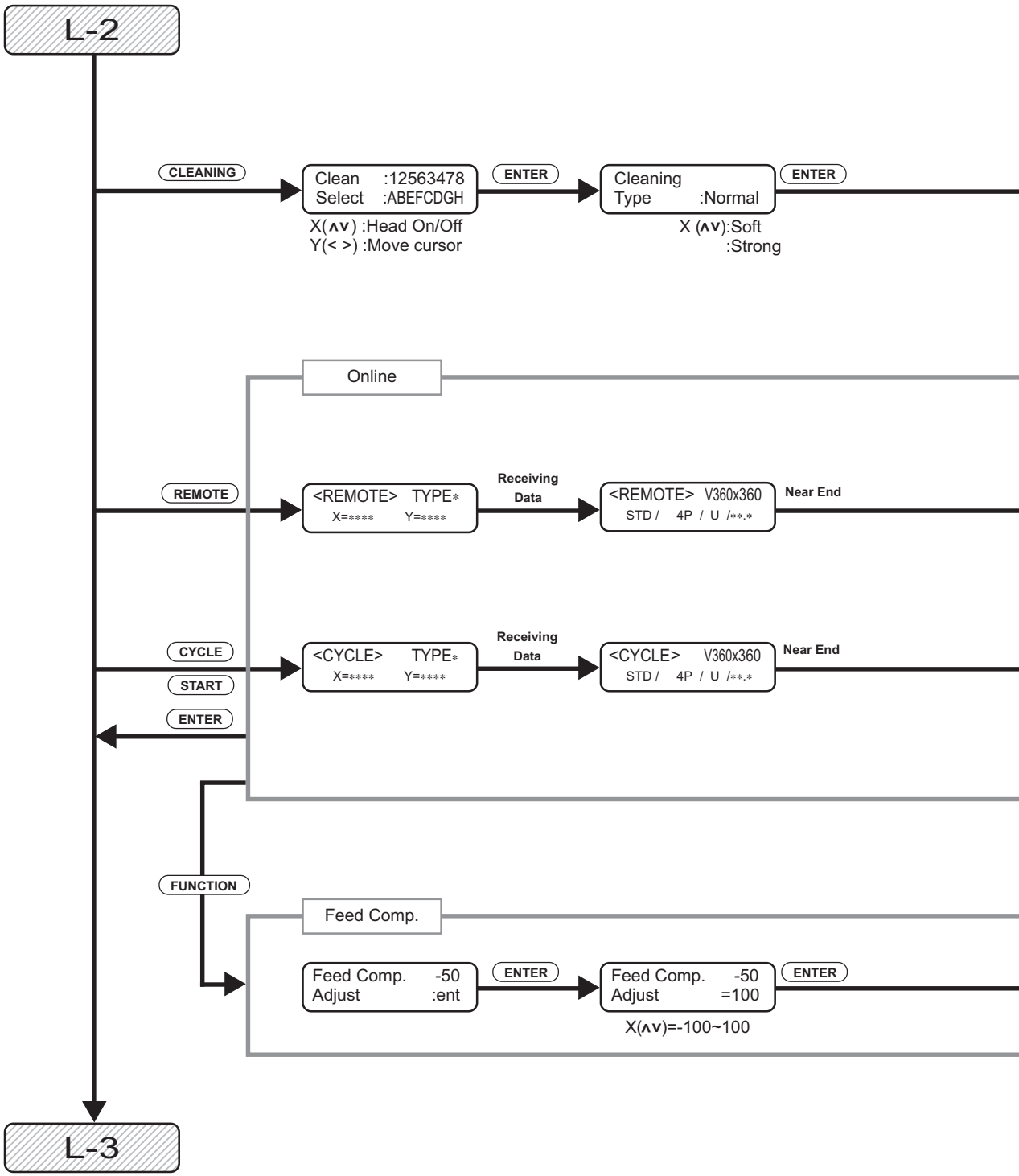
L-2
CLEANING
Clean :12563478
Select :ABEFCDGH
ENTER
Cleaning
Type :Normal
ENTER
X(∧∨) :Head On/Off
Y(< >) :Move cursor
X (∧∨):Soft
:Strong
Online
REMOTE
<REMOTE> TYPE*
X=**** Y=****
Receiving
Data
<REMOTE> V360x360
STD / 4P / U /**.*
Near End
CYCLE
START
ENTER
<CYCLE> TYPE*
X=**** Y=****
Receiving
Data
<CYCLE> V360x360
STD / 4P / U /**.*
Near End
FUNCTION
Feed Comp.
Feed Comp. -50
Adjust :ent
ENTER
Feed Comp. -50
Adjust =100
ENTER
X(∧∨)=-100~100
L-3

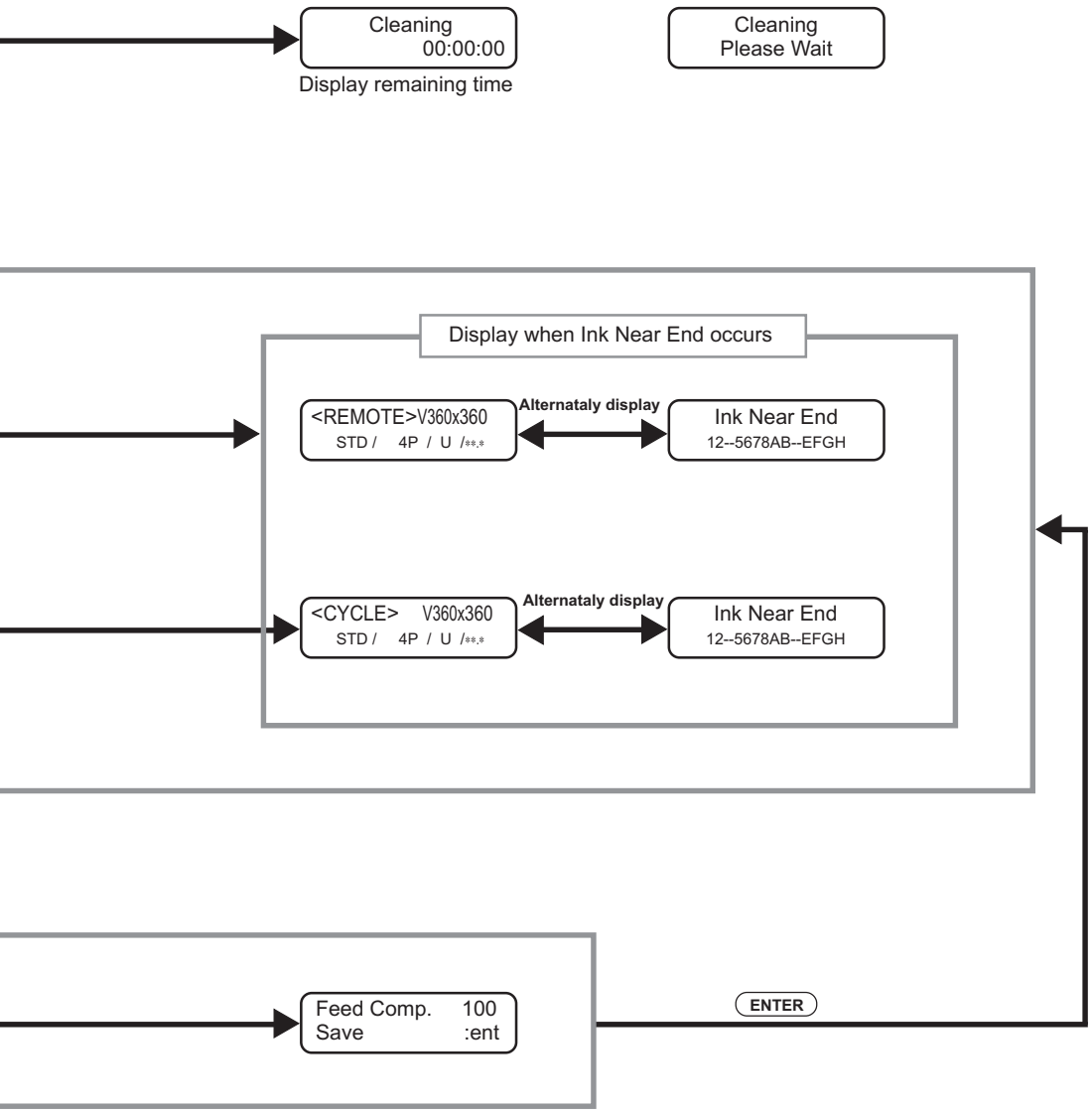
Cleaning
00:00:00
Display remaining time
Cleaning
Please Wait
Display when Ink Near End occurs
<REMOTE>V360x360
STD / 4P / U /**.*
Alternataly display
Ink Near End
12--5678AB--EFGH
<CYCLE> V360x360
STD / 4P / U /**.*
Alternataly display
Ink Near End
12--5678AB--EFGH
Feed Comp. 100
Save :ent
ENTER

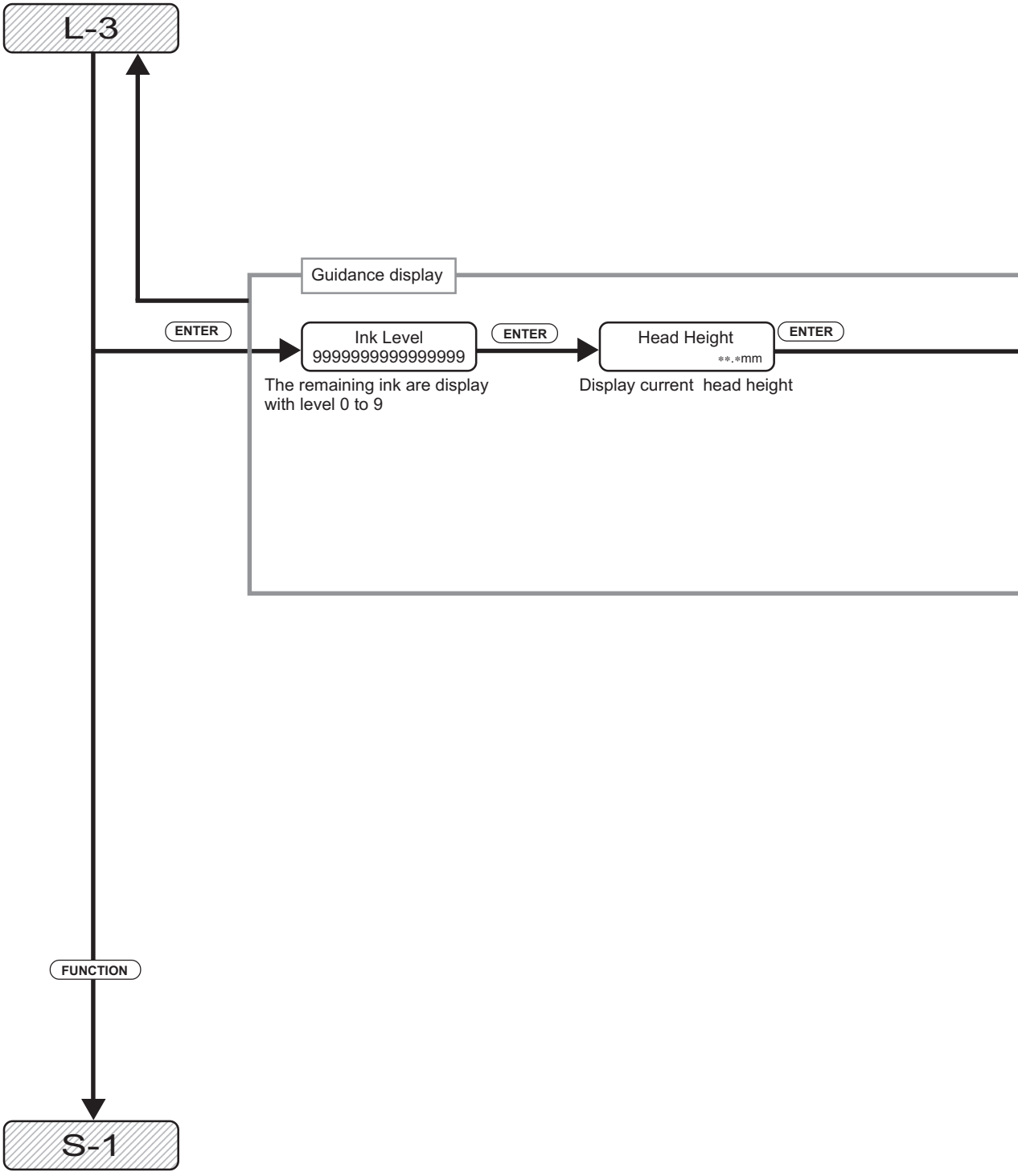
L-3
Guidance display
ENTER
Ink Level
9999999999999999
ENTER
Head Height
**.*mm
ENTER
The remaining ink are display
with level 0 to 9
Display current head height
FUNCTION
S-1

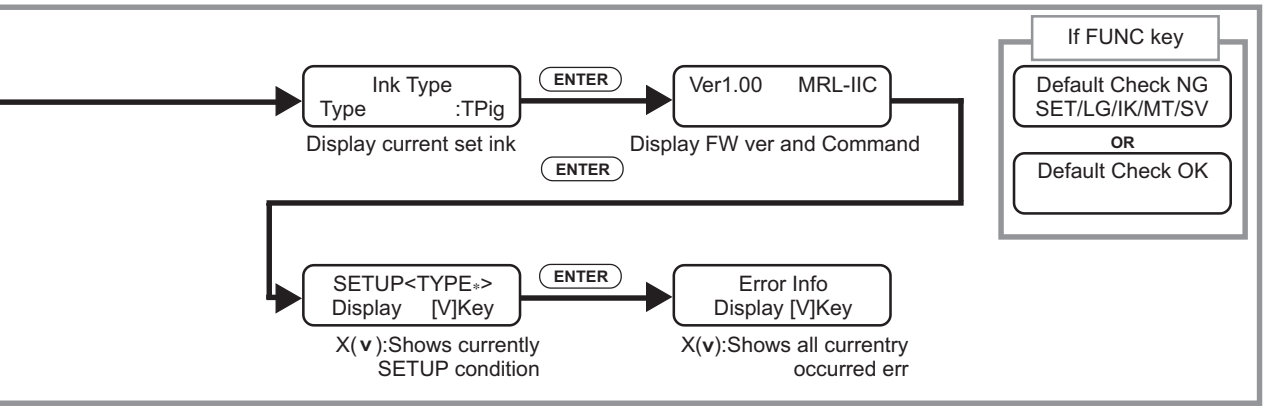
Ink Type
Type :TPig
Display current set ink
ENTER
Ver1.00 MRL-IIC
Display FW ver and Command
ENTER
SETUP<TYPE*>
Display [V]Key
X(v):Shows currently
SETUP condition
ENTER
Error Info
Display [V]Key
X(v):Shows all currentry
occurred err
If FUNC key
Default Check NG
SET/LG/IK/MT/SV
OR
Default Check OK

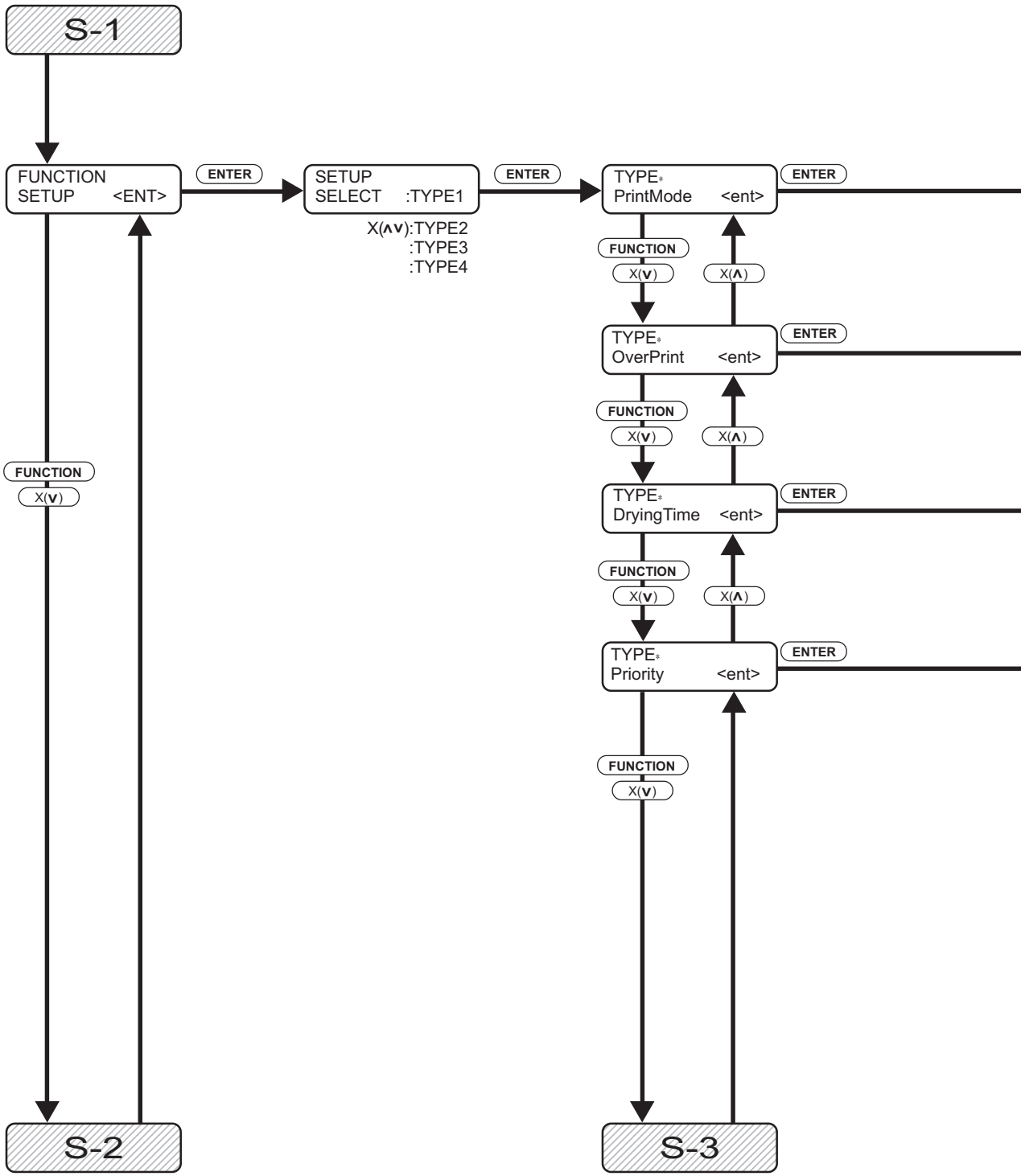
S-1
FUNCTION
SETUP <ENT>
ENTER
SETUP
SELECT :TYPE1
ENTER
X(∧∨):TYPE2
:TYPE3
:TYPE4
TYPE*
PrintMode <ent>
ENTER
FUNCTION
X(∨)
X(∧)
TYPE*
OverPrint <ent>
ENTER
FUNCTION
X(∨)
X(∧)
TYPE*
DryingTime <ent>
ENTER
FUNCTION
X(∨)
X(∧)
TYPE*
Priority <ent>
ENTER
FUNCTION
X(∨)
FUNCTION
X(∨)
S-2
S-3

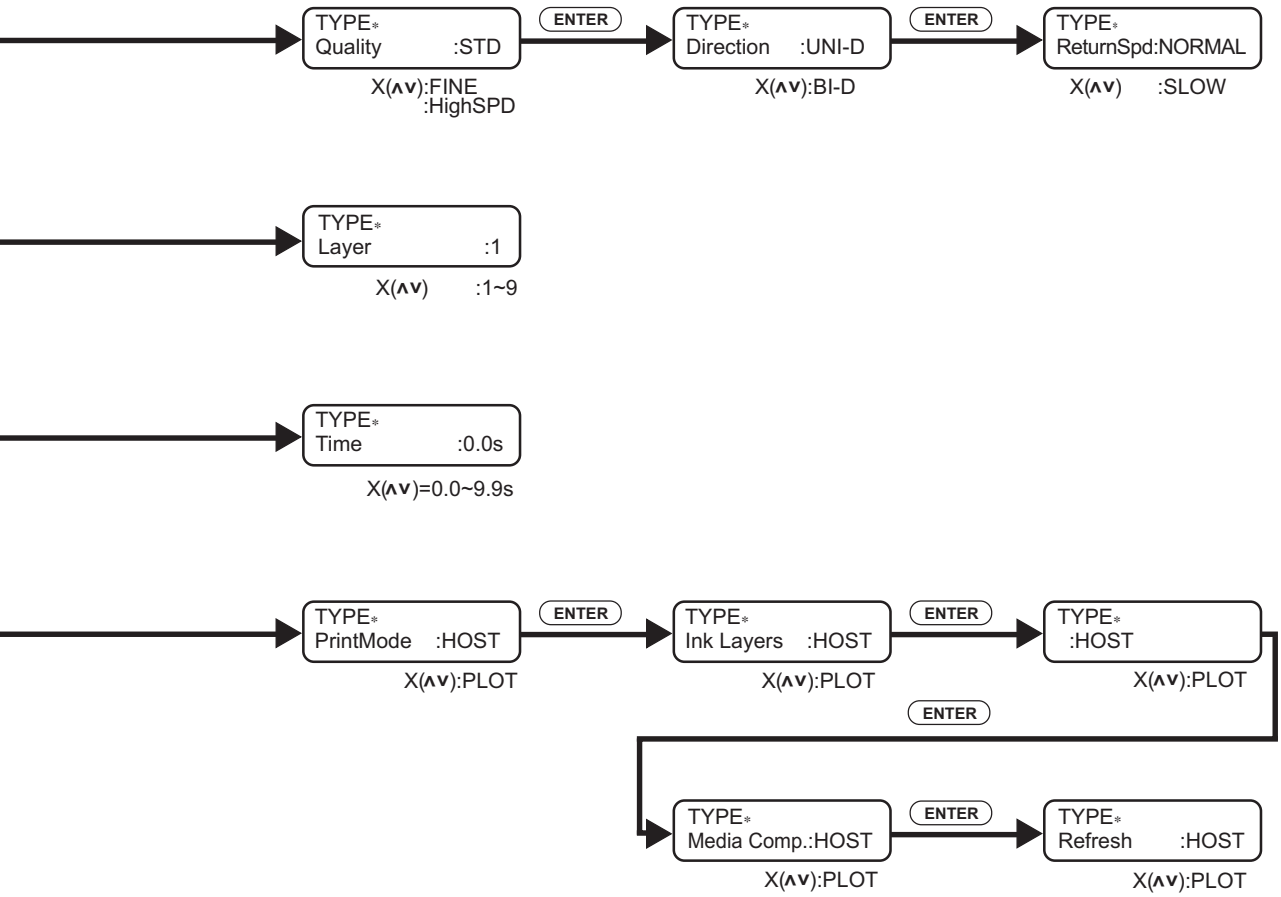
TYPE*
Quality :STD
X(∧∨):FINE
:HighSPD
ENTER
TYPE*
Direction :UNI-D
X(∧∨):BI-D
ENTER
TYPE*
ReturnSpd:NORMAL
X(∧∨) :SLOW
TYPE*
Layer :1
X(∧∨) :1~9
TYPE*
Time :0.0s
X(∧∨)=0.0~9.9s
TYPE*
PrintMode :HOST
X(∧∨):PLOT
ENTER
TYPE*
Ink Layers :HOST
X(∧∨):PLOT
ENTER
TYPE*
:HOST
X(∧∨):PLOT
ENTER
TYPE*
Media Comp.:HOST
X(∧∨):PLOT
ENTER
TYPE*
Refresh :HOST
X(∧∨):PLOT

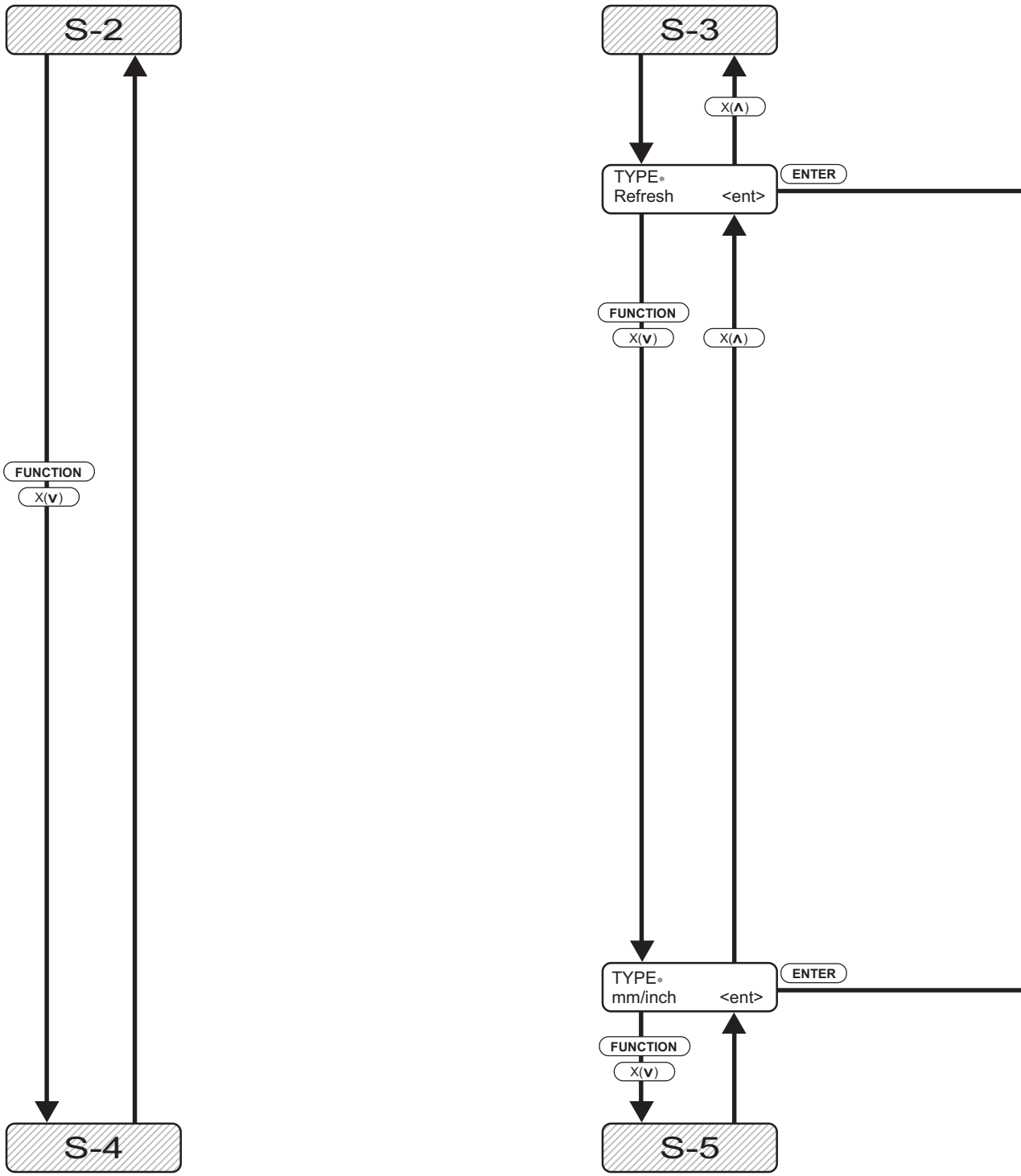
S-2
S-3
X(∧)
TYPE*
Refresh
<ent>
ENTER
FUNCTION
X(∨)
X(∧)
FUNCTION
X(∨)
TYPE*
mm/inch
<ent>
ENTER
FUNCTION
X(∨)
S-4
S-5

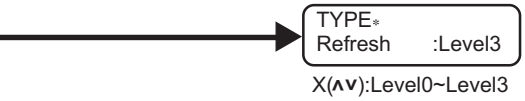

X(∧∨):Level0~Level3

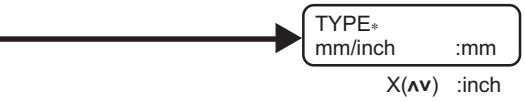

X(∧∨) :inch

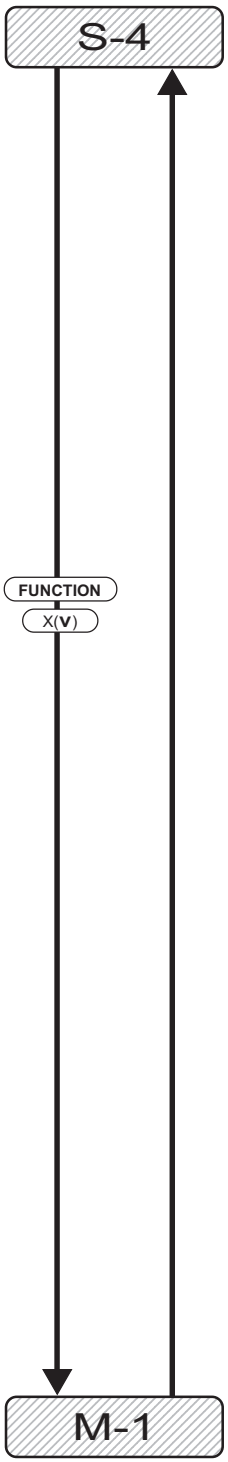
S-4
FUNCTION
X(V)
M-1

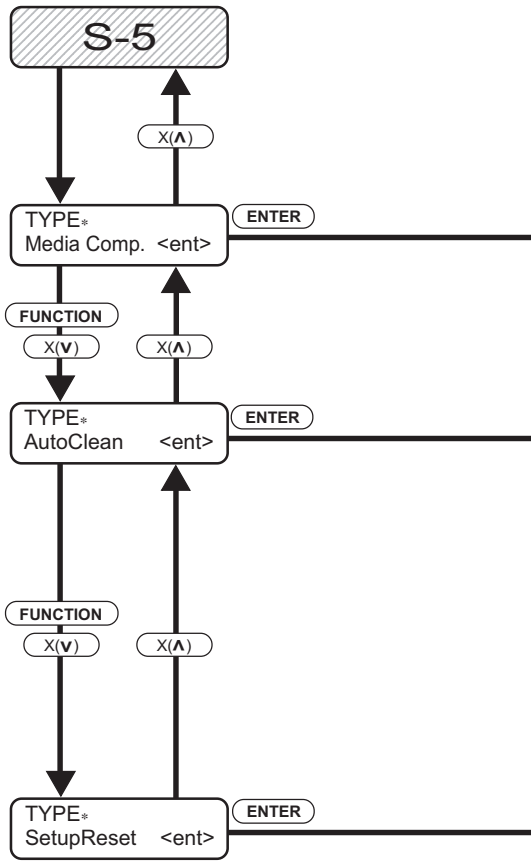
S-5
X(Λ)
TYPE*
Media Comp. <ent>
ENTER
FUNCTION
X(V)
X(Λ)
TYPE*
AutoClean <ent>
ENTER
FUNCTION
X(V)
X(Λ)
TYPE*
SetupReset <ent>
ENTER

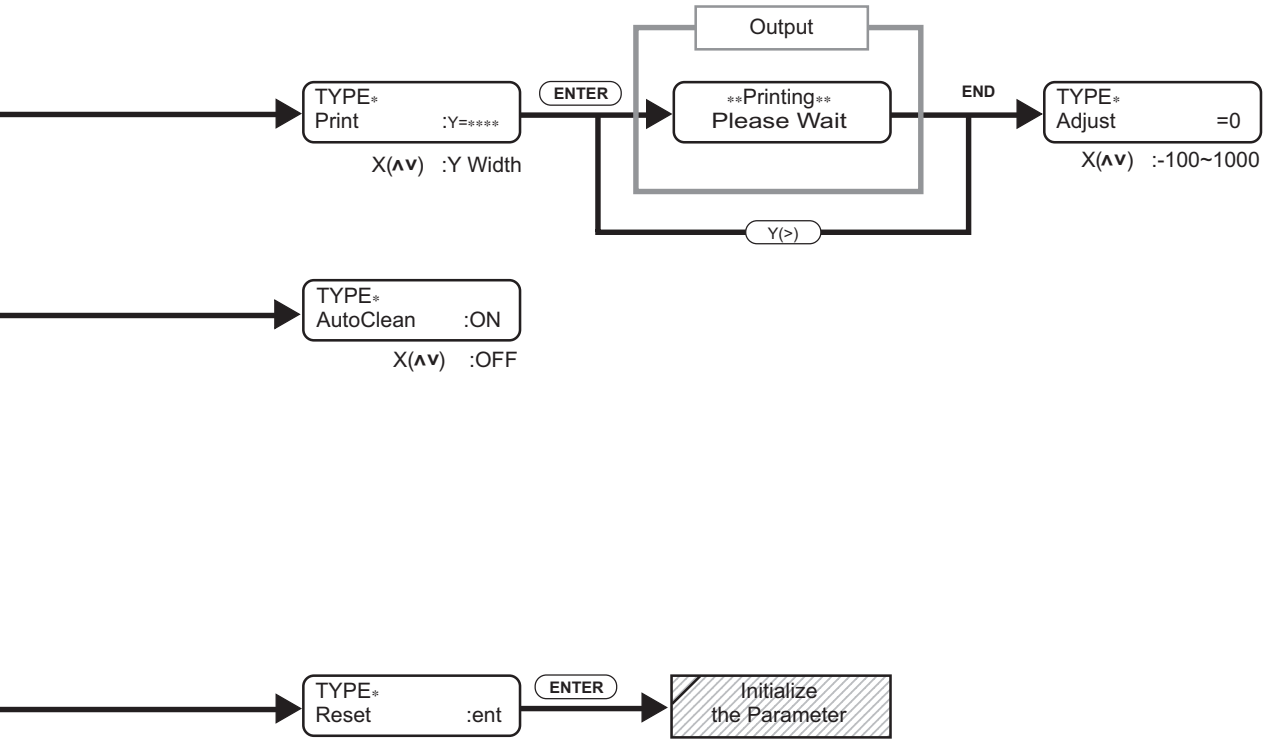
Output
TYPE*
Print :Y=****
X(∧∨) :Y Width
ENTER
Printing
Please Wait
END
TYPE*
Adjust =0
X(∧∨) :-100~1000
Y(>)
TYPE*
AutoClean :ON
X(∧∨) :OFF
TYPE*
Reset :ent
ENTER
Initialize
the Parameter

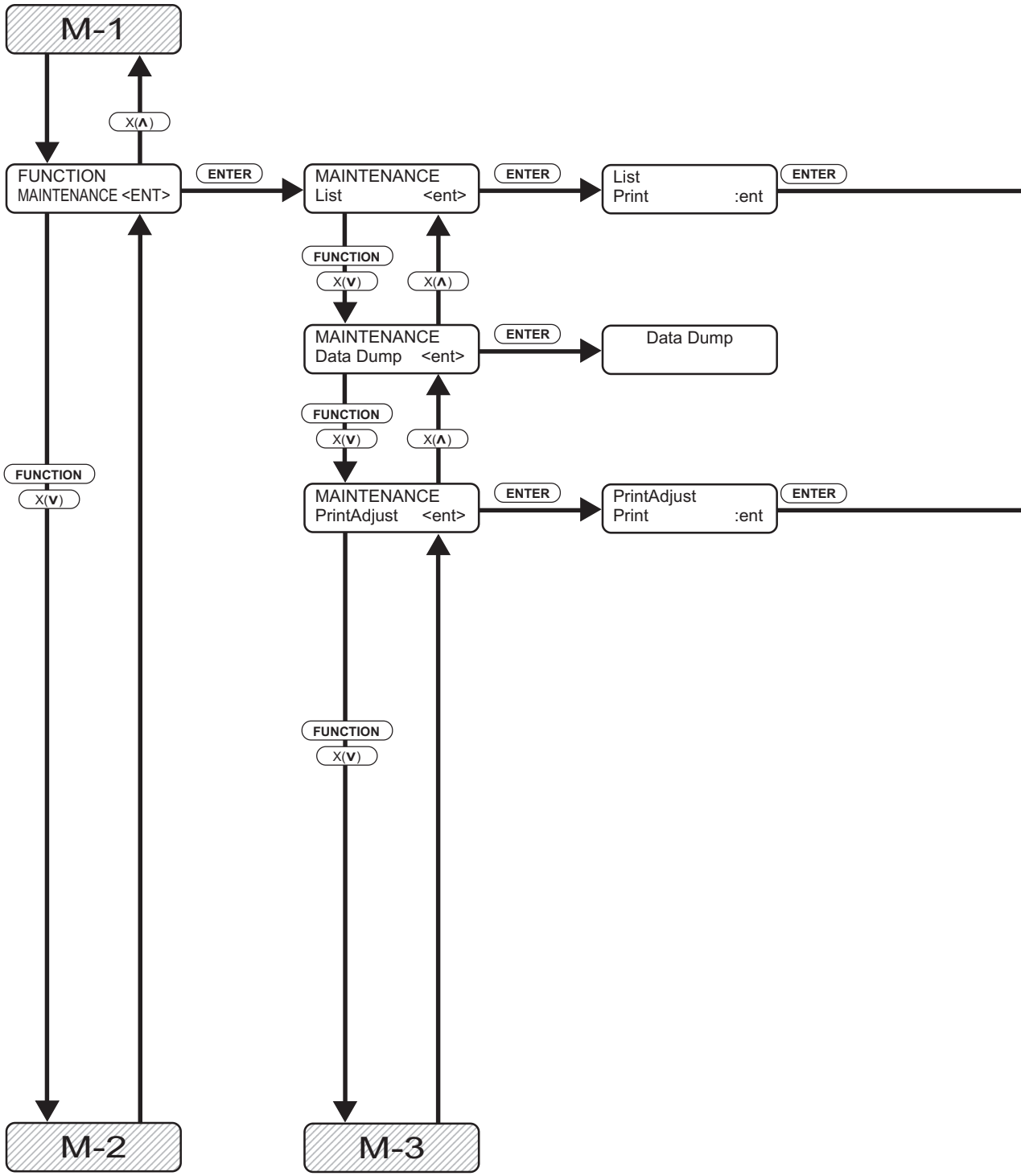
M-1
X(∧)
FUNCTION
MAINTENANCE <ENT>
ENTER
MAINTENANCE
List <ent>
ENTER
List
Print :ent
ENTER
FUNCTION
X(∨)
X(∧)
MAINTENANCE
Data Dump <ent>
ENTER
Data Dump
FUNCTION
X(∨)
X(∧)
FUNCTION
X(∨)
MAINTENANCE
PrintAdjust <ent>
ENTER
PrintAdjust
Print :ent
ENTER
FUNCTION
X(∨)
M-2
M-3

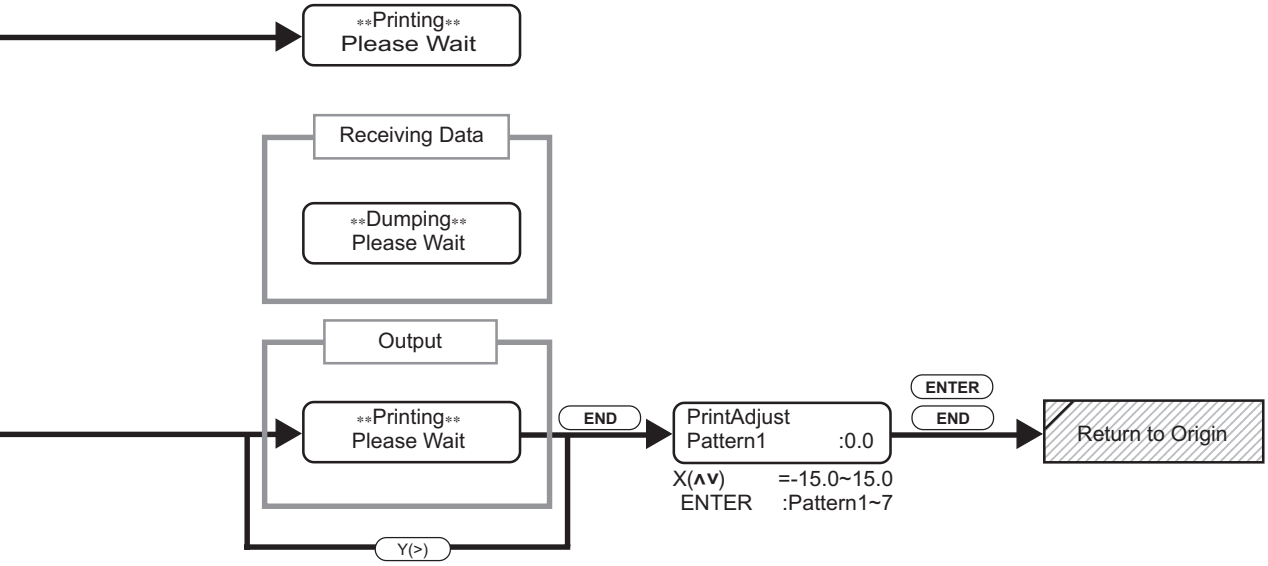
Printing
Please Wait
Receiving Data
Dumping
Please Wait
Output
Printing
Please Wait
END
PrintAdjust
Pattern1 :0.0
X(∧∨) =-15.0~15.0
ENTER :Pattern1~7
ENTER
END
Return to Origin
Y(>)

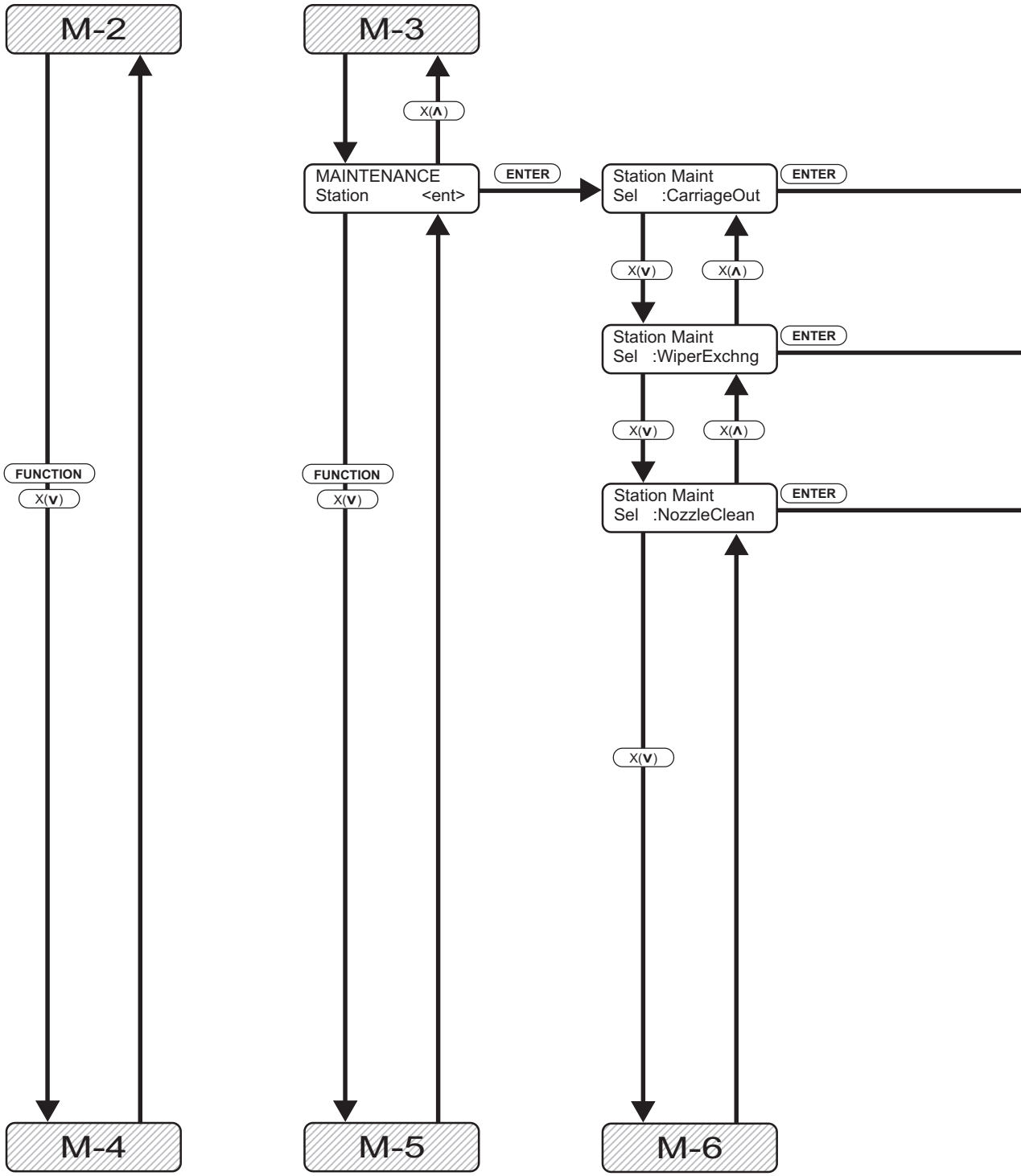
M-2
M-3
X(Λ)
MAINTENANCE
Station <ent>
ENTER
Station Maint
Sel :CarriageOut
ENTER
X(V)
X(Λ)
Station Maint
Sel :WiperExchng
ENTER
X(V)
X(Λ)
Station Maint
Sel :NozzleClean
ENTER
FUNCTION
X(V)
FUNCTION
X(V)
X(V)
M-4
M-5
M-6

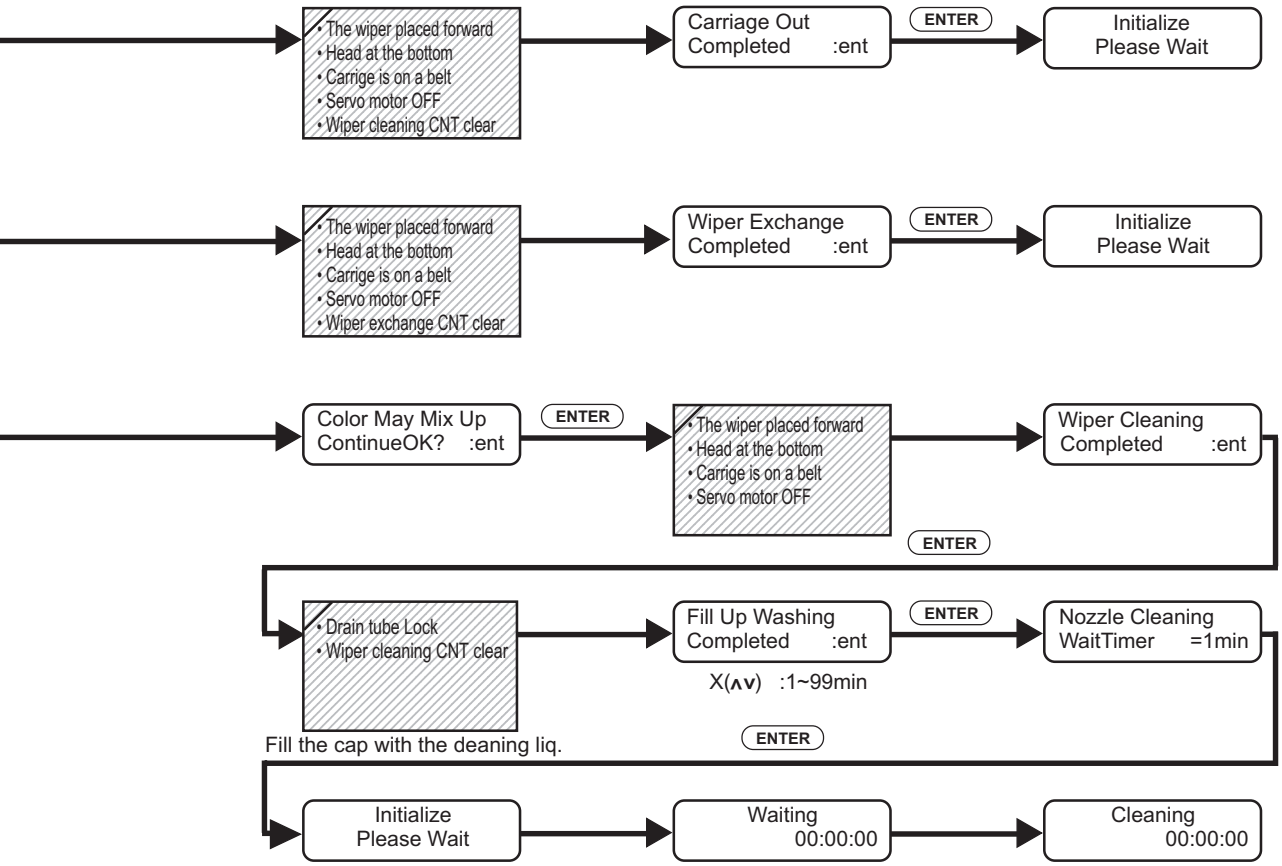
• The wiper placed forward
• Head at the bottom
• Carrige is on a belt
• Servo motor OFF
• Wiper cleaning CNT clear
Carriage Out
Completed :ent
ENTER
Initialize
Please Wait
• The wiper placed forward
• Head at the bottom
• Carrige is on a belt
• Servo motor OFF
• Wiper exchange CNT clear
Wiper Exchange
Completed :ent
ENTER
Initialize
Please Wait
Color May Mix Up
ContinueOK? :ent
ENTER
• The wiper placed forward
• Head at the bottom
• Carrige is on a belt
• Servo motor OFF
Wiper Cleaning
Completed :ent
ENTER
• Drain tube Lock
• Wiper cleaning CNT clear
Fill Up Washing
Completed :ent
ENTER
Nozzle Cleaning
WaitTimer =1min
X(∧∨) :1~99min
Fill the cap with the deaning liq.
ENTER
Initialize
Please Wait
Waiting
00:00:00
Cleaning
00:00:00

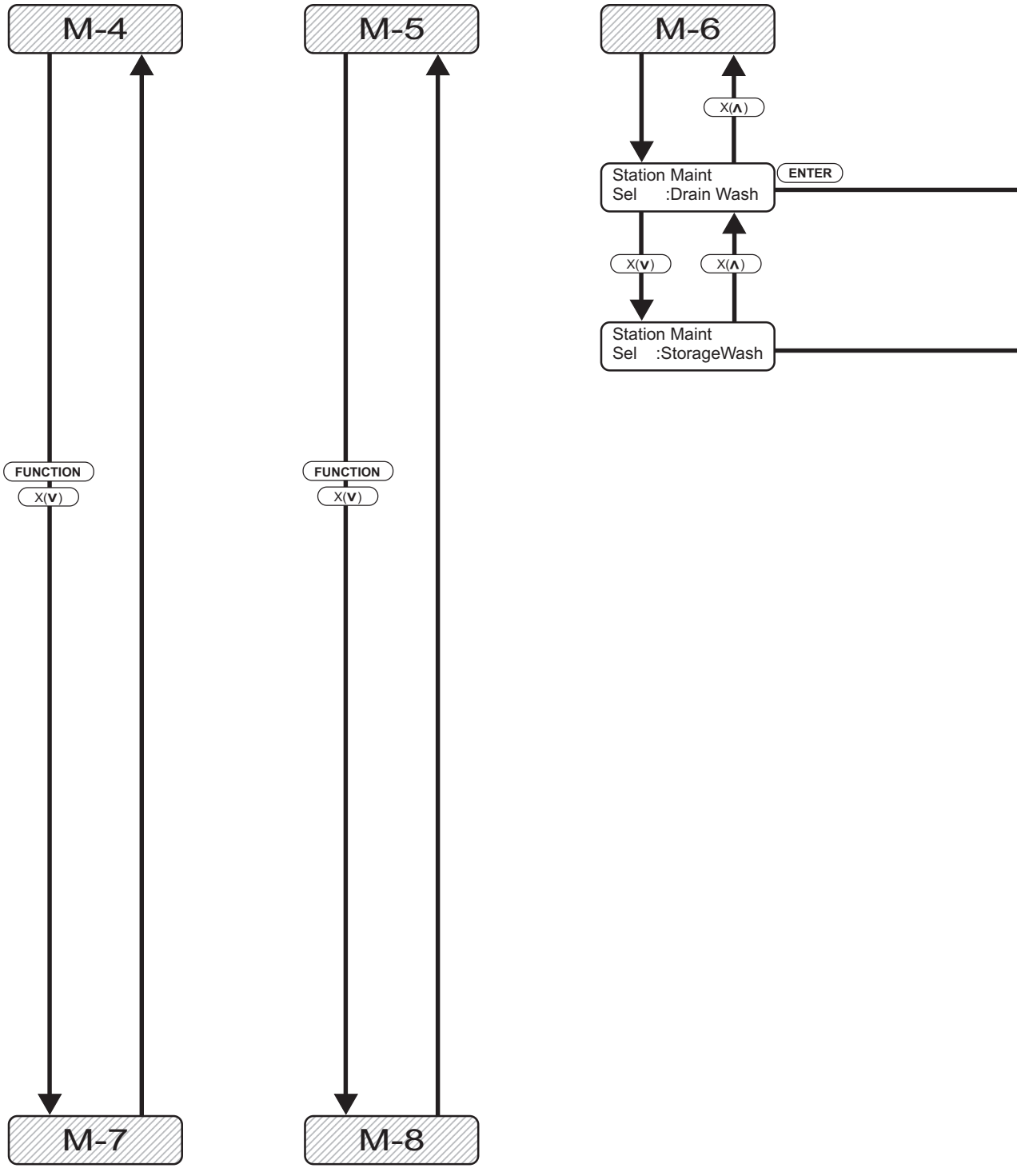
M-4
M-5
M-6
X(∧)
Station Maint
Sel :Drain Wash
ENTER
X(∨)
X(∧)
Station Maint
Sel :StorageWash
FUNCTION
X(∨)
FUNCTION
X(∨)
M-7
M-8

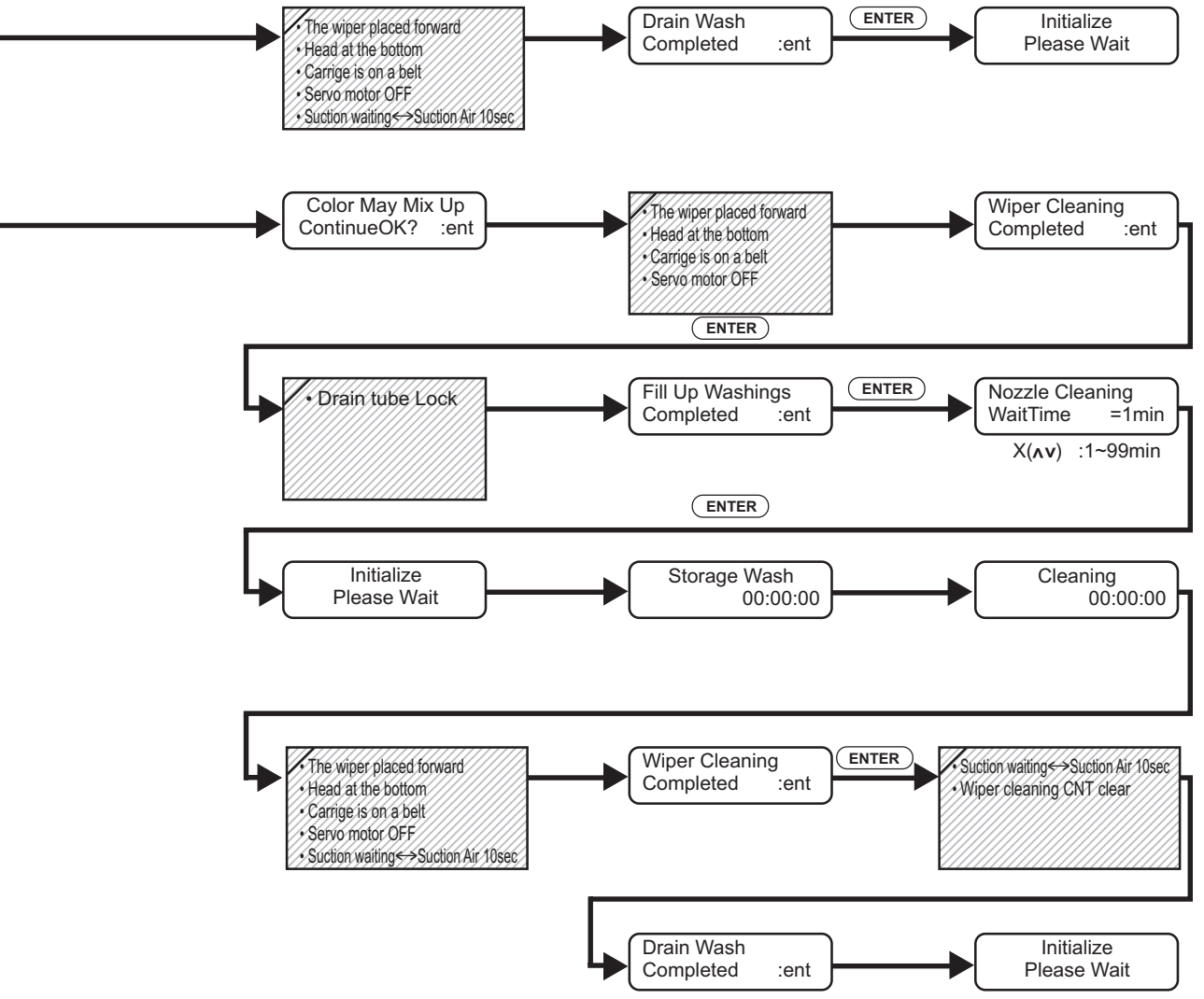
• The wiper placed forward
• Head at the bottom
• Carrige is on a belt
• Servo motor OFF
• Suction waiting<->Suction Air 10sec
Drain Wash
Completed :ent
ENTER
Initialize
Please Wait
Color May Mix Up
ContinueOK? :ent
• The wiper placed forward
• Head at the bottom
• Carrige is on a belt
• Servo motor OFF
ENTER
Wiper Cleaning
Completed :ent
• Drain tube Lock
Fill Up Washings
Completed :ent
ENTER
Nozzle Cleaning
WaitTime =1min
X(∧∨) :1~99min
ENTER
Initialize
Please Wait
Storage Wash
00:00:00
Cleaning
00:00:00
• The wiper placed forward
• Head at the bottom
• Carrige is on a belt
• Servo motor OFF
• Suction waiting<->Suction Air 10sec
Wiper Cleaning
Completed :ent
ENTER
• Suction waiting<->Suction Air 10sec
• Wiper cleaning CNT clear
Drain Wash
Completed :ent
Initialize
Please Wait

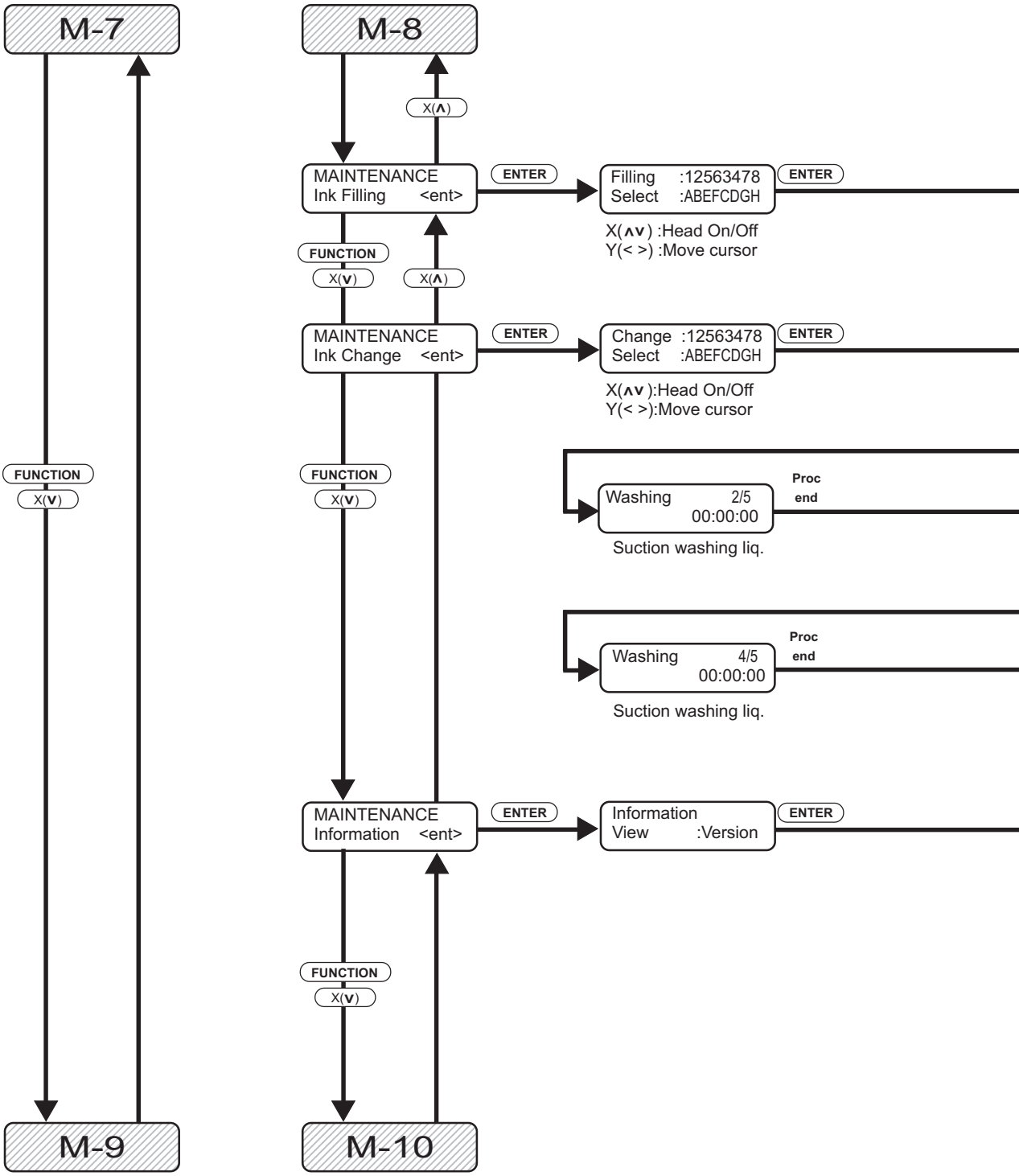
M-7
M-8
X(∧)
MAINTENANCE
Ink Filling <ent>
ENTER
Filling :12563478
Select :ABEFCDGH
ENTER
X(∧∨) :Head On/Off
Y(< >) :Move cursor
FUNCTION
X(∨)
X(∧)
MAINTENANCE
Ink Change <ent>
ENTER
Change :12563478
Select :ABEFCDGH
ENTER
X(∧∨):Head On/Off
Y(< >):Move cursor
FUNCTION
X(∨)
FUNCTION
X(∨)
Washing 2/5
00:00:00
Proc
end
Suction washing liq.
Washing 4/5
00:00:00
Proc
end
Suction washing liq.
MAINTENANCE
Information <ent>
ENTER
Information
View :Version
ENTER
FUNCTION
X(∨)
M-9
M-10

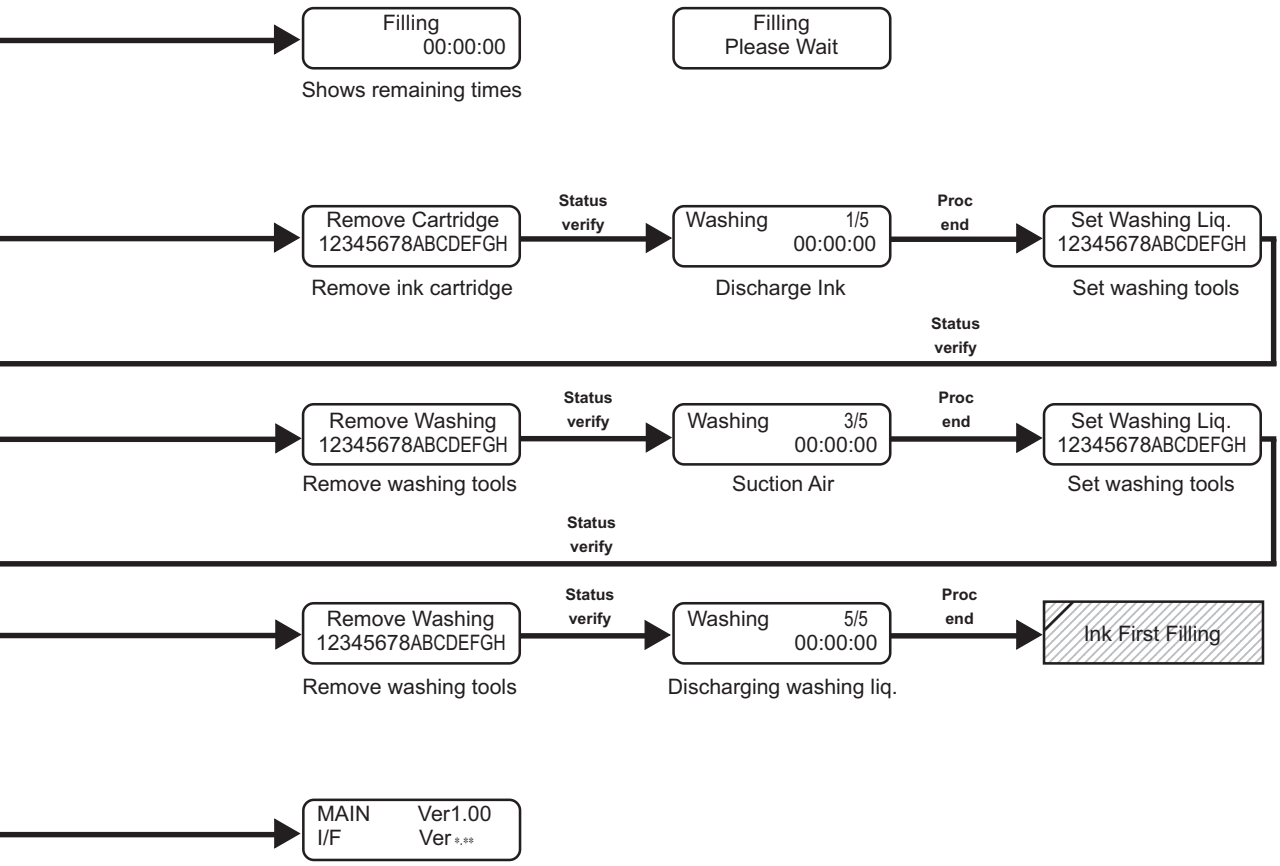
Filling
00:00:00
Shows remaining times
Filling
Please Wait
Remove Cartridge
12345678ABCDEFGH
Remove ink cartridge
Status
verify
Washing 1/5
00:00:00
Discharge Ink
Proc
end
Set Washing Liq.
12345678ABCDEFGH
Set washing tools
Status
verify
Remove Washing
12345678ABCDEFGH
Remove washing tools
Status
verify
Washing 3/5
00:00:00
Suction Air
Proc
end
Set Washing Liq.
12345678ABCDEFGH
Set washing tools
Status
verify
Remove Washing
12345678ABCDEFGH
Remove washing tools
Status
verify
Washing 5/5
00:00:00
Discharging washing liq.
Proc
end
Ink First Filling
MAIN Ver1.00
I/F Ver*.**

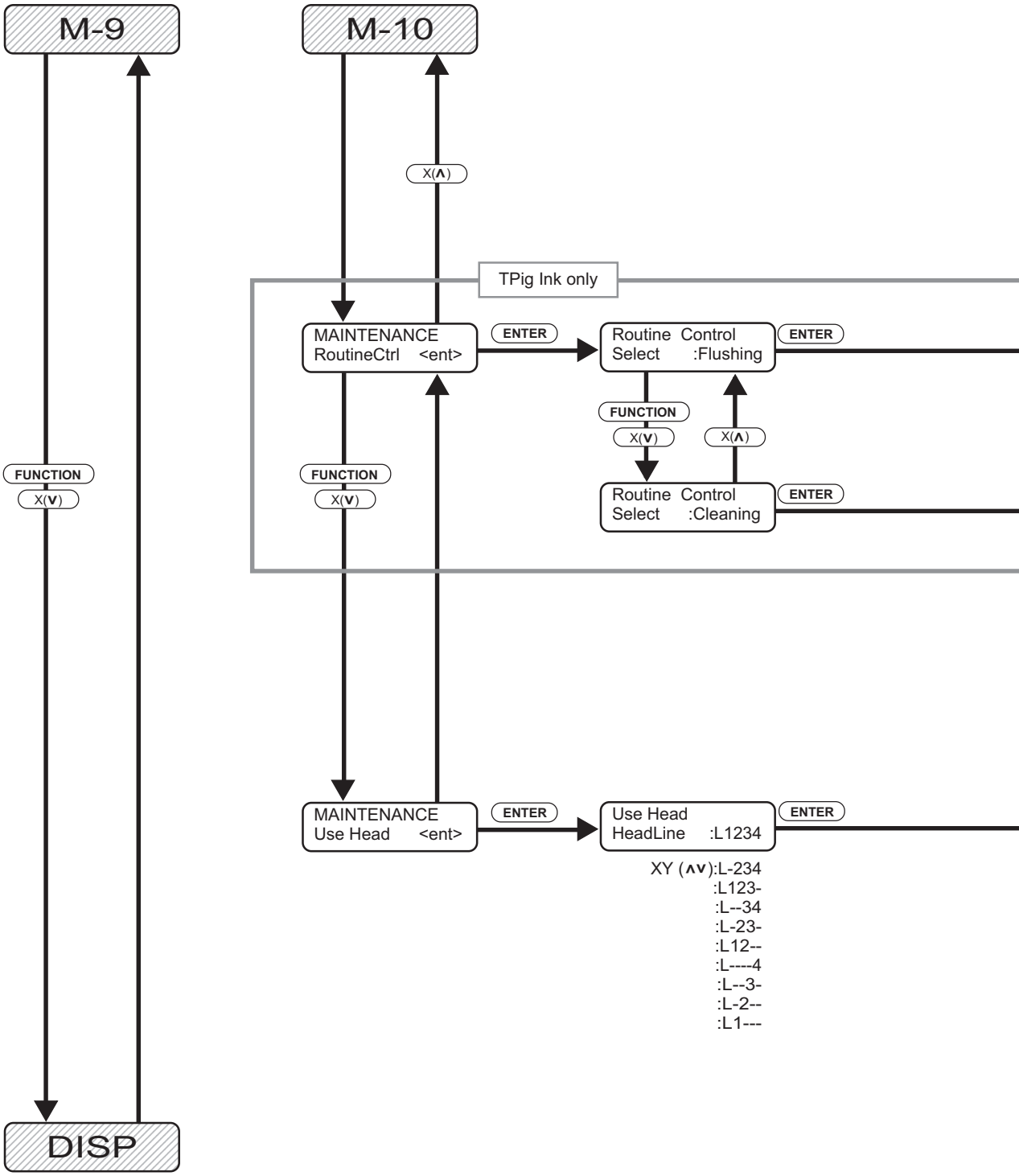
M-9
M-10
X(∧)
TPig Ink only
MAINTENANCE
RoutineCtrl <ent>
ENTER
Routine Control
Select :Flushing
ENTER
FUNCTION
X(∨)
X(∧)
FUNCTION
X(∨)
Routine Control
Select :Cleaning
ENTER
FUNCTION
X(∨)
MAINTENANCE
Use Head <ent>
ENTER
Use Head
HeadLine :L1234
ENTER
XY (∧∨):L-234
:L123-
:L--34
:L-23-
:L12--
:L----4
:L--3-
:L-2--
:L1---
DISP

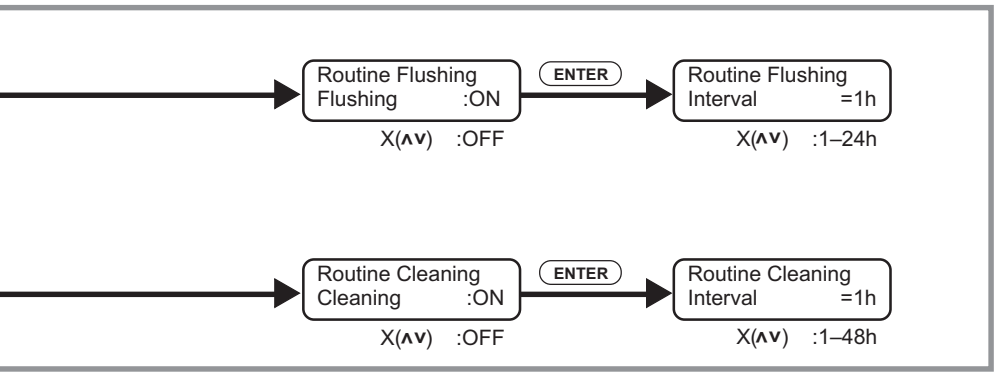
Routine Flushing
Flushing :ON
X(∧∨) :OFF
ENTER
Routine Flushing
Interval =1h
X(∧∨) :1–24h
Routine Cleaning
Cleaning :ON
X(∧∨) :OFF
ENTER
Routine Cleaning
Interval =1h
X(∧∨) :1–48h

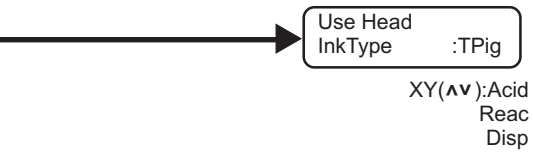
Use Head
InkType :TPig
XY(∧∨):Acid
Reac
Disp

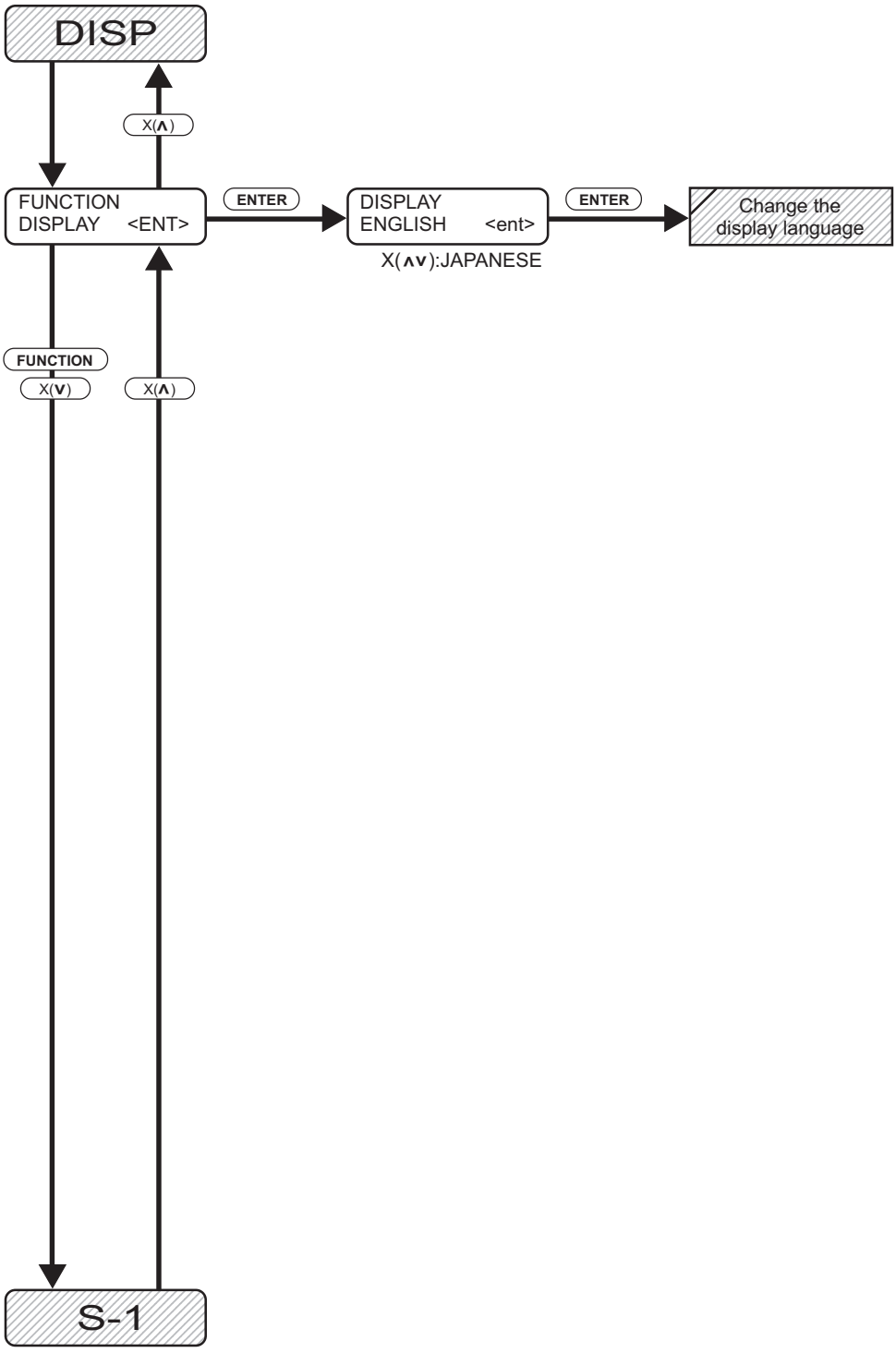
DISP
X(∧)
FUNCTION
DISPLAY <ENT>
ENTER
DISPLAY
ENGLISH <ent>
ENTER
Change the
display language
X(∧∨):JAPANESE
FUNCTION
X(∨)
X(∧)
S-1

PrintedinJapan
© MIMAKI ENGINEERING Co., Ltd.

TI
TM