Operation Manual

UV INKJET PRINTER

UJF200-3042
UJF200-6042

Operation Manual

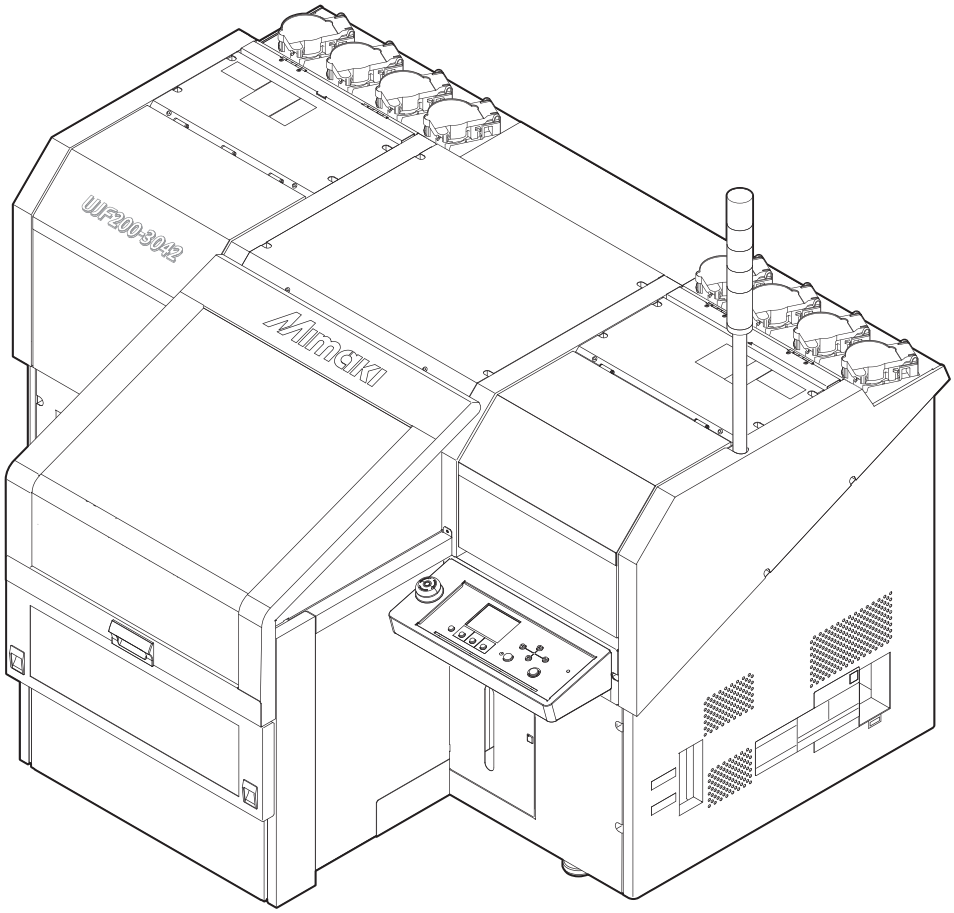

You can also download the latest manual from official website.

MIMAKI ENGINEERING CO., LTD.

https://mimaki.com/

D203973-11
Original instructions

Table of Contents

Introduction 5
To Ensure Safe Use 7
Symbols 7
Usage Precautions 8
Usage Restrictions 12
Notes on Handling Ink or any Other Liquid Used with the Machine 13
Ink Specifications 14
Restrictions Concerning the Expiration Date of Ink Used in the Machine 15
Installation Precautions 16
Installation Space 17
When you want to relocate the machine 18
Safety Interlocks 19
Emergency Stop Switches 20
Warning Label 21

Chapter 1 Before Use

1.1 Part Names and Functions 26
Front 26
Carriage 27
Pilot Light (Indicator Light) 28
Operating Panel 29
1.2 About the table 32
Precautions When Placing Media on a Table 32
About Tap Positions 33
Important Notes Regarding Tables 34
1.3 Connecting the Power Cable 35
Turning On the Power 36
Turning Off the Power 37
1.4 Connecting a PC to the Product 38
Using a USB Cable 38
Using a LAN Cable 38
1.5 System Configuration 40
Installing the Mimaki Driver 41
Installing RIP Software 41
Obtaining Color Profiles 41
Setting Up RIP Software 41
1.6 Ink Replacement Method 43
When Ink Near End is Displayed 43
When Ink End is Displayed 43
Replacing Ink 43

Chapter 2 Basic Operation

2.1 Print Process 52

2.2 Loading the Media 53
Media 53
Set the media thickness 54
Changing the origin 54
Loading the Media 55
2.3 Test Printing 57
Perform test printing using the white calibration test pattern 58
2.4 Print Data 59
Starting Printing 59
Cancel Printing 59
Confirming Whether Print Data Is Being Received or Has Been Received 60
If “! Work High” is displayed, ... 60
If you open the cover while printing 60

Chapter 3 Setup

3.1 Head Height Menu 62
Gap Check 63
3.2 Origin Setting Menu 65
Setting the Z-axis origin 66
Changing the Origin Using the Jog Key 66
3.3 Media Selection Menu 68
3.4 Media Setting Menu 69
3.5 Function Setting Menu 71
Auto-correction 73
Feed Correction Settings 73
3.6 Maintenance Menu 75
Registering Nozzle Recovery 77
Nozzle Check 78
3.7 Environment Setting Menu 79
Network Settings 81
Setting the Receive/Retrieval Position (MDL Command) 82
3.8 Machine Status Menu 83

Chapter 4 Maintenance

4.1 Maintenance Precautions 86

4.2 Maintenance Methods 87
Maintenance Items and Timing 87
Ink Maintenance 88
Maintenance in the Head Area 89
Cloth Wiper Area Cleaning 90
Cleaning the Mist Filter 91
Cap Rubber Cleaning 92
Cleaning the Ink Discharge Channels 93
Cleaning the Table 95
Exterior Cleaning 95
If the product will not be used for an extended period of time 95
NCU Cleaning 97
DAS (Automatic Correction Function) Sensor Cleaning 98
4.3 Replacement of Consumable Item 100
Cloth Wiper Replacement 100
Mist Filter Replacement 103
Maintenance of the Waste Ink Tank 104
Cap Replacement 106
Replacing the Deodorizer Filter 108

Chapter 5 Troubleshooting

5.1 Before You Start Thinking There Might Be A Failure 114
If you experience poor image quality: 114
When you want to clear a nozzle clogging 114
5.2 Problems Causing Messages to Appear 115
Warning Messages 115
Ink Error 116
Error Message 117

Chapter 6 Appendix

6.1 Specifications 128
6.2 Options List 130
6.3 LICENSE Library 131

Introduction

Thank you for purchasing the UV-LED curable inkjet printer UJF200-3042/6042.

Read this operating manual ("this document" hereinafter) thoroughly and make sure you understand its contents to ensure safe and correct use of the product.

Please note that the illustrations contained in this manual are intended to show functions, procedures, or operations and may sometimes differ slightly from the actual machine.

Adobe, the Adobe logo, Acrobat, Illustrator, Photoshop, and PostScript are the trademarks or registered trademarks of Adobe Incorporated in the United States and other countries.

Other company and product names mentioned herein are the trademarks or registered trademarks of the respective companies in Japan and in other countries.

Unauthorized reproduction of any portion of this document is strictly prohibited.

© 2026 MIMAKI ENGINEERING Co., Ltd.

DISCLAIMERS

- MIMAKI ENGINEERING REJECTS ALL LIABILITY FOR DAMAGE ARISING DIRECTLY OR INDIRECTLY FROM THE USE OF THE UJF200-3042/6042 ("THIS MACHINE" HEREINAFTER), WHETHER OR NOT THE PRODUCT IS FAULTY.
- MIMAKI ENGINEERING REJECTS ALL LIABILITY FOR DAMAGE, DIRECT OR INDIRECT, TO MATERIALS CREATED WHILE USING THIS MACHINE.
- USING THIS MACHINE IN CONJUNCTION WITH DEVICES OTHER THAN THOSE RECOMMENDED BY MIMAKI ENGINEERING MAY RESULT IN FIRE OR ACCIDENTS. SUCH INCIDENTS ARE NOT COVERED BY THE PRODUCT WARRANTY. MIMAKI ENGINEERING REJECTS ALL LIABILITY FOR DAMAGE, DIRECT OR INDIRECT, ARISING FROM SUCH INCIDENTS.
- USE ONLY GENUINE MIMAKI ENGINEERING INK AND MAINTENANCE LIQUID. USE OF OTHER PRODUCTS MAY RESULT IN FAILURES OR REDUCE PRINT QUALITY. SUCH INCIDENTS ARE NOT COVERED BY THE PRODUCT WARRANTY. MIMAKI ENGINEERING REJECTS ALL LIABILITY FOR DAMAGE, DIRECT OR INDIRECT, ARISING FROM SUCH INCIDENTS.
- DO NOT ATTEMPT TO REFILL THE INK BOTTLES WITH UNAUTHORIZED INK. SUCH INCIDENTS ARE NOT COVERED BY THE PRODUCT WARRANTY. MIMAKI ENGINEERING REJECTS ALL LIABILITY FOR DAMAGE, DIRECT OR INDIRECT, ARISING FROM SUCH INCIDENTS.
- AVOID USING UV-LED UNITS OR UV POWER SUPPLY UNITS OTHER THAN THOSE SPECIFIED BY MIMAKI ENGINEERING. USING DEVICES OTHER THAN GENUINE MIMAKI ENGINEERING DEVICES MAY RESULT IN FAILURE, ELECTRIC SHOCK, OR FIRE. SUCH INCIDENTS ARE NOT COVERED BY THE PRODUCT WARRANTY. MIMAKI ENGINEERING REJECTS ALL LIABILITY FOR DAMAGE, DIRECT OR INDIRECT, ARISING FROM SUCH INCIDENTS.

TV and radio interference



- The machine emits high-frequency electromagnetic radiation while operating. Under certain circumstances, this may result in TV or radio interference. We make no guarantee that this machine will not affect special radio or TV equipment.

If radio or TV interference occurs, check the radio or TV reception after turning off the machine. If the interference disappears when the power is turned off, the machine is likely to be the cause of the interference.

Try any of the following solutions or combinations of these solutions:

- Change the orientation of the TV or radio antenna to find a position where interference does not occur.
- Move the TV or radio away from this machine.
- Plug the TV or radio into a power outlet on a power circuit other than the power circuit to which this machine is connected.

FCC (Federal Communications Commission) regulations

The machine has been tested and certified to comply with restrictions applying to Class A digital devices under Part 15 of the FCC regulations. These restrictions are designed to provide suitable protection from harmful interference when the printer is used in commercial environments.

This product may generate, use, or emit radio frequency energy and may cause harmful interference with radio communications if not installed or used in accordance with the operating manual.

Use of this product in residential areas may cause harmful interference. If so, the user is responsible for rectifying such interference.



- Use only the cables recommended by Mimaki Engineering when connecting to the machine. Use of other cables may cause the product to exceed the restrictions stipulated by FCC regulations. To maintain compliance with FCC regulations, use the cables recommended by Mimaki Engineering.

To Ensure Safe Use

Symbols

In this manual, symbols indicate and explain precautions. Make sure you fully understand the meaning of each symbol and use the machine safely and correctly.

		Explanation
⚠WARNING	Warning	Indicates a potential hazard that may result in death or serious injury if handled improperly or if instructions are disregarded.
⚠CAUTION	Caution	Indicates a potential hazard that may result in minor or moderate injury if handled improperly or if instructions are disregarded.
NOTICE	Notice	Indicates a potential hazard that may result in property damage if handled improperly or if instructions are disregarded.
	Warning sign	Indicates something that requires attention. Warning specifics are drawn inside the symbol.
	Mandatory action sign	Indicates an action that must be carried out. The specifics of the mandatory action are drawn inside the symbol.
	Prohibition sign	Indicates a prohibited action. The specifics of the prohibited action are drawn inside the symbol.
Important!	Important	Indicates important information related to use of this machine.
	Tip	Indicates useful reference information.
	Reference information	Indicates the corresponding page for related information.

Usage Precautions

In the event of abnormal conditions

⚠ WARNING



- In the event of abnormal conditions such as smoke or unusual odor, turn off the main power immediately and unplug the power cable. Continuing to use the machine under these conditions may result in failure, electric shock, or fire. Once you have confirmed that smoke is no longer being emitted, contact your local dealer or our service office. Never attempt to repair the machine yourself, which is hazardous.

⚠ CAUTION



- Immediately wipe off any ink, maintenance liquid, waste ink, or other liquid used with the product that comes into contact with your skin. Then wash using soap, and rinse with plenty of water. Failure to wash off ink may result in skin inflammation. If your skin becomes irritated or painful, seek medical attention immediately.
- If ink, maintenance liquid, waste ink, or any other liquid used in the product comes into contact with your eyes, rinse immediately with plenty of clean water. Rinse for at least 15 minutes. If you are wearing contact lenses and can remove them easily, rinse them under clean running water for at least 15 minutes before removing them. Be sure to also rinse the undersides of your eyelids. Failure to rinse off ink may result in blindness or impaired vision. If your eyes become irritated or painful, seek medical attention immediately.
- If ink, maintenance liquid, waste ink, or any other liquid used in the product enters your mouth or is swallowed, gargle with water immediately. Do not induce vomiting. Seek medical attention promptly. Inducing vomiting may cause liquid to enter the airway.
- If a large amount of vapor is inhaled, move to a well-ventilated area, keep warm, and rest in a posture that allows easy breathing. If the condition does not improve, seek medical attention promptly.

NOTICE



- If an ink leak occurs, turn off the main power immediately and unplug the power cable. Then, contact your local dealer or our service office.

Power supply precautions

⚠ WARNING

- Use the power cable provided. Otherwise there is a risk of failure, electric shock, or fire. The power cable provided is exclusive for the machine, and must not be used for other electrical equipment.
- Always hold the plug when removing the power cable. Pulling out the power cable may damage the cable, leading to failure, electric shock, or fire.
- Do not use the machine with dust accumulated on the power plug. Otherwise there is a risk of failure, electric shock, or fire.
- Take care to prevent metals from touching the power plug blades. Otherwise there is a risk of failure, electric shock, or fire.
- Do not damage or modify the power cable. Do not place heavy objects on, heat or stretch it. Doing so may damage the cable, leading to electric shock or fire.
- Do not use extension cords or power strips. Otherwise there is a risk of failure, electric shock, or fire.
- Do not use the power cable if it is damaged or broken or if the core wire is exposed. Otherwise there is a risk of failure, electric shock, or fire.
- Do not handle the power plug with wet hands. Disregarding this precaution may result in electric shock.

- Plug the power cable plug into a grounded power outlet. Otherwise there is a risk of failure, electric shock, or fire.
- When installing electrical outlets, perform grounding work to prevent electric shock. All electrical work (Class C grounding work; formerly Type 3 grounding work) must be handled by a licensed electrician.

NOTICE

- Do not turn off the main power supply. Turning off the main power supply will disable the automatic maintenance function (including nozzle clogging prevention function and ink discharge channel cleaning function). This increases the risk of ejection failures (such as nozzle clogging or deflection).

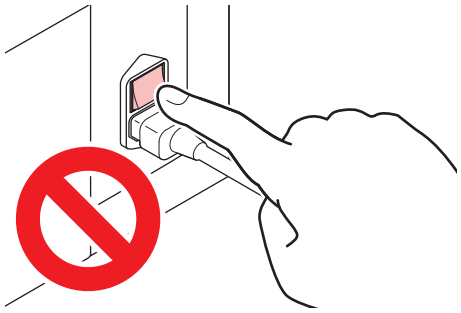

- Use the machine with a power supply that meets specifications.
- Be sure to plug the power cable into a power outlet close to the machine. Insert the power plug blade securely.
- When connecting the power cable, check the input voltage of the power outlet and the capacity of the breaker. Also, connect each cable to a separate power source with an independent breaker. Connecting to power outlets linked with the same breaker will cause the breaker to trip.

Please do not ride the machine.

NOTICE

- Please do not climb onto the table under any circumstances. The accuracy of the table surface may be compromised, which could affect print quality.

● Caution regarding moving parts

⚠CAUTION



- Keep parts of the body such as the face and hands away from moving parts. Also keep clothing (e.g., loose clothing and accessories) that may impede work away from the machine. Failure to do so may result in injury.



- Long hair should be tied back. Failure to do so may result in injury.

● Do not disassemble or repair

⚠WARNING



- Do not attempt to disassemble or repair this machine. Otherwise there is a risk of failure, electric shock, or fire.

● Ultraviolet light (UV) and the UV-LED unit

⚠WARNING



- Do not place combustibles under the UV-LED unit, and do not cover it with paper or cloth. There is a risk of fire or burns.
- Small amounts of ultraviolet light may leak from the UV-LED unit. Wear UV safety glasses, face shields, masks, gloves, and long-sleeved clothing to protect the eyes and skin from ultraviolet light.

  (1) Exposure to ultraviolet light may result in skin inflammation. Even if no inflammation occurs, extended or repeated exposure may lead to chronic problems.
  - Acute problems: Inflammation
  - Chronic problems: Skin cancer, wrinkles, blotches

  (2) Looking directly at the lamp while the lamp is on may result in eye pain or damage to eyesight. Even if no eye pain occurs, extended or repeated exposure may lead to chronic problems.
  - Acute problems: Ultraviolet keratitis, conjunctivitis, discomfort, pain, watery eyes
  - Chronic problems: Pterygium, cataracts

⚠CAUTION



- The UV-LED unit becomes extremely hot. Be careful not to touch the LED after it has been turned off until it has sufficiently cooled.



- Do not expose the skin or eyes directly or indirectly to light from the UV-LED unit. The UV-LED unit emits ultraviolet (UV) light. Skin or eye exposure may result in inflammation.



- Always wear the provided UV safety glasses. Otherwise there is a risk of eye pain or visual impairment.

NOTICE

- Avoid scratching or subjecting the UV-LED unit to excessive force. Disregarding this precaution may result in deformation or failure of the unit.
- Avoid touching the glass on the underside of the UV-LED unit with bare hands. Disregarding this precaution may impair UV ink curing. If the glass becomes dirty, wipe clean using a soft, clean cloth soaked with ethanol. Be careful to keep ethanol from splashing on the covers or other parts while cleaning. Disregarding this precaution may result in deformation or failure of the unit.

About Lasers

⚠ WARNING

- The machine is a class 1 laser product, but the laser sensor uses a Class 2 laser. Never look directly into the laser beam. It can cause eye pain and vision problems.

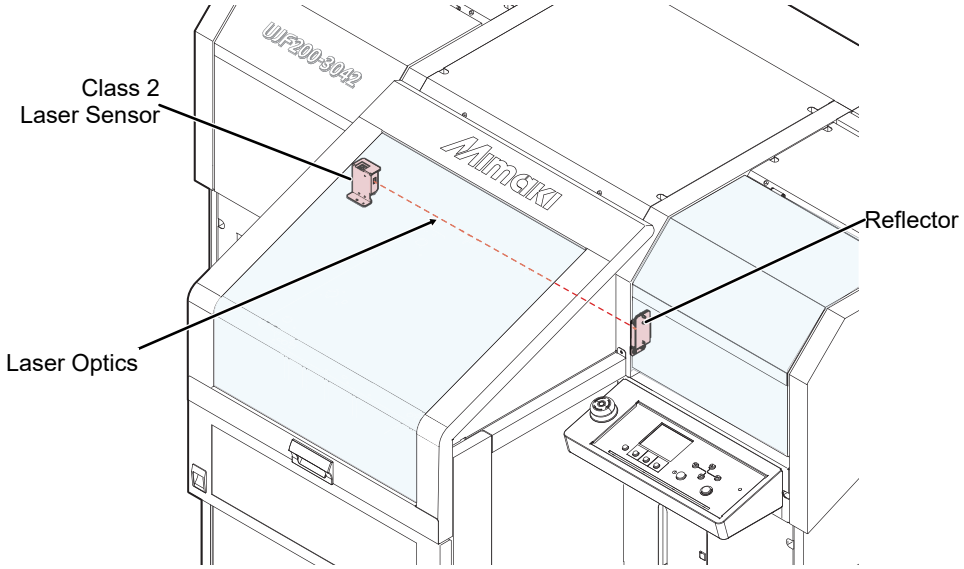

Other usage precautions

⚠ WARNING

- Keep children away from the machine.

NOTICE

Disposing of the product

⚠ CAUTION

- Please contact your local retailer or service agent.
- When disposing of the product yourself, contact an industrial waste disposal operator or dispose of the product in accordance with local laws and regulations.

Usage Restrictions

Usage Restrictions

⚠ WARNING

- The machine is extremely dangerous because the carriage moves rapidly from side to side, the table moves, and it contains high-temperature components, hazardous voltage components, and UV LEDs. The machine must only be used by persons who are fully aware of these hazards.

Operator Restrictions

⚠ WARNING

- The machine must only be operated by persons who have received Mimaki safety training or who have been trained by them.

Area Restrictions

⚠ WARNING

- Entry into the restricted area must be prohibited for anyone other than those who have received Mimaki risk assessment training or who have been trained by them.

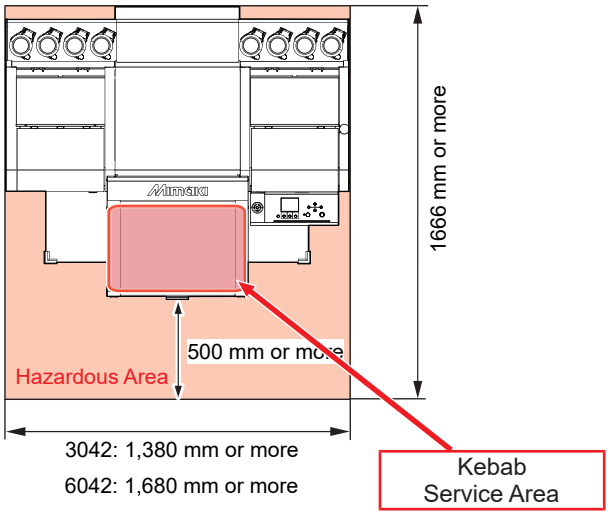

- The UV-LED in the printer unit is classified as Risk Group 2 in accordance with IEC 62471. Please use this product in accordance with the warning labels on the product and the safety instructions in this manual.

- The optional KebabHS system is classified as Risk Group 3 in accordance with IEC 62471. When accessing the interior of the KebabHS device, be sure to wear UV safety glasses and protective gloves.

- Physically separate the machine, for example, by placing in a special room or in an area surrounded by a safety fence. It must be clear that this is a hazardous area.
  (1) Any special room provided should incorporate a door that can be locked or has a safety interlock
  (2) Any safety fences used must conform to the EN ISO 13857 standards.

Notes on Handling Ink or any Other Liquid Used with the Machine

Precautions regarding ink, maintenance liquid, or other liquids used with this machine are included with the containers. Thoroughly read them and make sure you understand the contents.



- Be sure to read the safety data sheet (SDS) before use. https://mimaki.com/supply/sds/

⚠CAUTION



- Pay close attention to ventilation and be sure to wear safety glasses, gloves, and a mask when handling ink, maintenance liquid, waste ink, or other solutions used with the machine. Leaking ink may adhere to the skin or get into the eyes or mouth.



- Do not subject cases containing ink to strong shock or violent shaking. Do not attempt to refill the ink. Leaking ink may adhere to the skin or get into your eyes or mouth.



- Do not disassemble cases containing ink. Leaking ink may adhere to the skin or get into your eyes or mouth.



- Do not store ink, maintenance liquid, or other liquids used with the machine in locations where children may enter.



- When disposing of ink, maintenance liquid or other liquid used with the product, or containers or non-woven fabric contaminated with ink or other liquid, contact an industrial waste disposal operator or dispose of the product in accordance with the local laws and regulations.

NOTICE



- Do not store ink, maintenance liquid, or other liquids used with the machine in locations exposed to direct sunlight.
- Do not store ink, maintenance liquid, or other liquids used with the machine in environments where cutting fluid or other volatile substances (such as amines or modified amine alcohol) are present in significant quantities. Storage in such places increases the risk of failure or ejection failures (e.g., nozzle clogging or deflection).
- Do not use ink, maintenance liquid, or other liquids used with this machine with other printers. Doing so may cause failure.



- Be sure to store them in a low place no higher than 1 m above the floor. Otherwise there is a risk of scattering if the containers fall.
- Store in tightly sealed containers.
- Store in a cool, dark place.
  (1) Store ink in a place where ink does not freeze. Using defrosted ink may deteriorate ink constituents and reduce print quality.
  (2) When ink is moved from a cold place to a warm place, leave it in the environment where the machine is installed for at least three hours before using it.
  (3) Open the container just before installing it, and use it up as quickly as possible. If it is opened and left for an extended period of time, print quality may be reduced.

- Do not touch the metal parts of the ink IC chip. Static electricity may damage the ink IC chip, and dirt or damage may cause the ink IC chip read error.

- Printing is not possible when different types of ink IC chips are used.
- If the ink bottle mounted on the machine is dented, it may still be used.

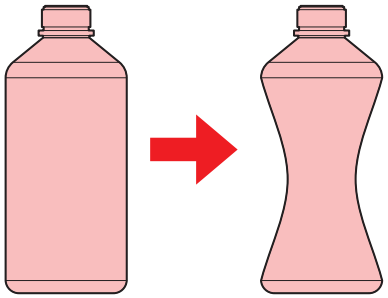

Ink Specifications

Item		Specifications
Form		1-liter ink bottle / 250-milliliter ink
Color		K: Black Ink C: Cyan ink M: Magenta Ink Y: Yellow Ink W: White ink CL: Clear Ink Pr: Primer Ink (PR-200) Lc: Light Cyan Lm: Light Magenta Fp: Fluorescent Pink Fy: Fluorescent yellow
Ink capacity		1 L / 250 ml
Expiration Date		The expiration date is as indicated on the ink bottle. However, once opened, use within 3 months, even if the product is still within its expiration date.
Storage temperature	When stored	5 to 30 °C (within 1 month at 30 °C) • Store the container in a sealed state. • Store in a well-ventilated, dry, cool, and dark place.
	During transportation	1 to 60 °C • However, not more than 120 hours at 60 °C, and not more than 1 month at 40 °C • Avoid places where the temperature drops below 0 °C or rises above 40 °C.

Restrictions Concerning the Expiration Date of Ink Used in the Machine

Example: When the expiration date is April 20xx

- May 20xx: Replace with new ink or use up as quickly as possible. Printing is possible.
- June 20xx: Replace with new ink or use up as quickly as possible. Printing is possible.
- July 20xx: Printing is not possible.



- The message appears on the display.

Important!

- The ink expiration date is indicated on the ink container. Expired ink may cause ejection failures or alter the color tone. Printing is possible even if the ink has passed its expiration date. Nevertheless, we recommend replacing with new ink or using up as quickly as possible.

Installation Precautions

⚠ WARNING



- Do not install the machine in a place close to fire.
- Do not place flower vases, pots, cups, containers containing cosmetics, chemicals or water, or small metal items on or close to the machine. If they enter the machine, there is a risk of failure, electric shock, or fire.



- Do not install this machine in humid locations or locations where it may be exposed to splashing water. Otherwise there is a risk of failure, electric shock, or fire.



- Do not install the machine in a place where children may enter.

⚠ CAUTION



- A ventilation system must be provided if the machine is installed in a poorly ventilated area or sealed room.
- Be sure to observe the following points regarding exhaust port installation:
  (1) Exhaust port installation must conform to local environmental, health, and safety (EHS) guidelines.
  (2) If the exhaust port is fitted with a shutoff valve, the valve must be open when the machine is in use.

NOTICE



- Do not install the machine in areas where there is dust or fine particles. If water gets inside the machine, it may cause failures or ejection failures (such as nozzle clogging or nozzle deflection).
- Do not place the machine in a location where it is exposed to air from an air conditioner or other source. Dust and other particles may enter the interior of the machine.
- Do not install the machine in an unstable location or in an area subject to vibration. This can cause failures or ejection failures (such as nozzle clogging or nozzle deflection).
- Do not place the machine in direct sunlight.
- Do not install the machine in locations subject to extreme temperature fluctuations. This can cause failures or ejection failures (such as nozzle clogging or nozzle deflection).
- Do not install the machine in a location where large machinery that generates noise is located.
- Do not install the machine in areas where vapors from photographic fixing agents or acidic gases (such as acetic acid or hydrochloric acid) are present, or where the air is filled with metalworking fluids or highly volatile substances (such as amines or amine-modified alcohols). If installed in such an environment, the ink on the print head surface will harden, causing failures or ejection failures (such as nozzle clogging or nozzle deflection).



- Operating environment: 20 to 30 °C (68 to 86 °F), 35 to 65 %RH (no condensation)
- Temperature range in which accuracy is guaranteed: 20 to 25 °C (68 to 77 °F)

Installation Space

Provide the following space around the machine to allow safe and proper replacement of ink and media:

Item	UJF200-3042	UJF200-6042
Width*1	At least 2,580 mm (1,380 mm)	At least 2,880 mm (1,680 mm)
Depth*1	2,166 mm or greater (1,166 mm)	
Height*1 (Includes the color indicator lamp.)	1,524 m*2 or greater (1,186 mm)	
Weight*1	259 kg*2 (171 kg)	275 kg*2 (187 kg)

*1. The figures in parentheses indicate machine dimensions.

*2. Includes a dedicated stand.

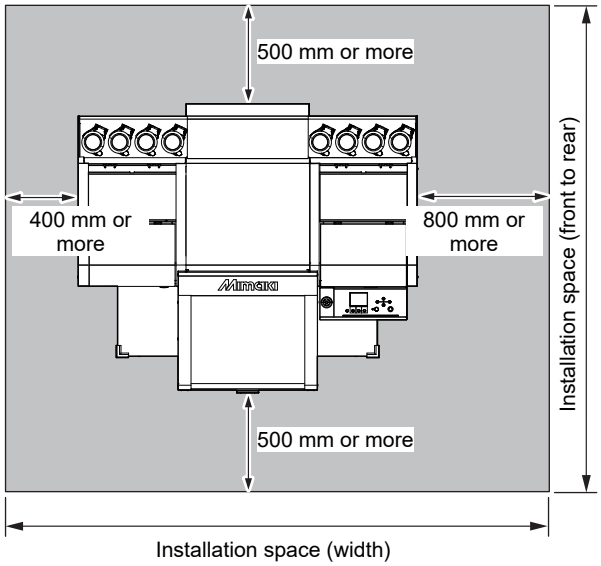

- If the genuine option "A107806 / OPT-01034 Dedicated Installation Stand" is not used and a custom stand is used instead, prepare a stand that meets the following specifications.
  (1) Load capacity: 414kg or more (evenly distributed load)
  (2) Flatness: The local deflection of the top surface of the stand shall not exceed 0.3 mm when a concentrated load of 41.4 kg is applied at each adjuster foot position shown in the figure on the following page.

Position of the Level Foot on This Unit

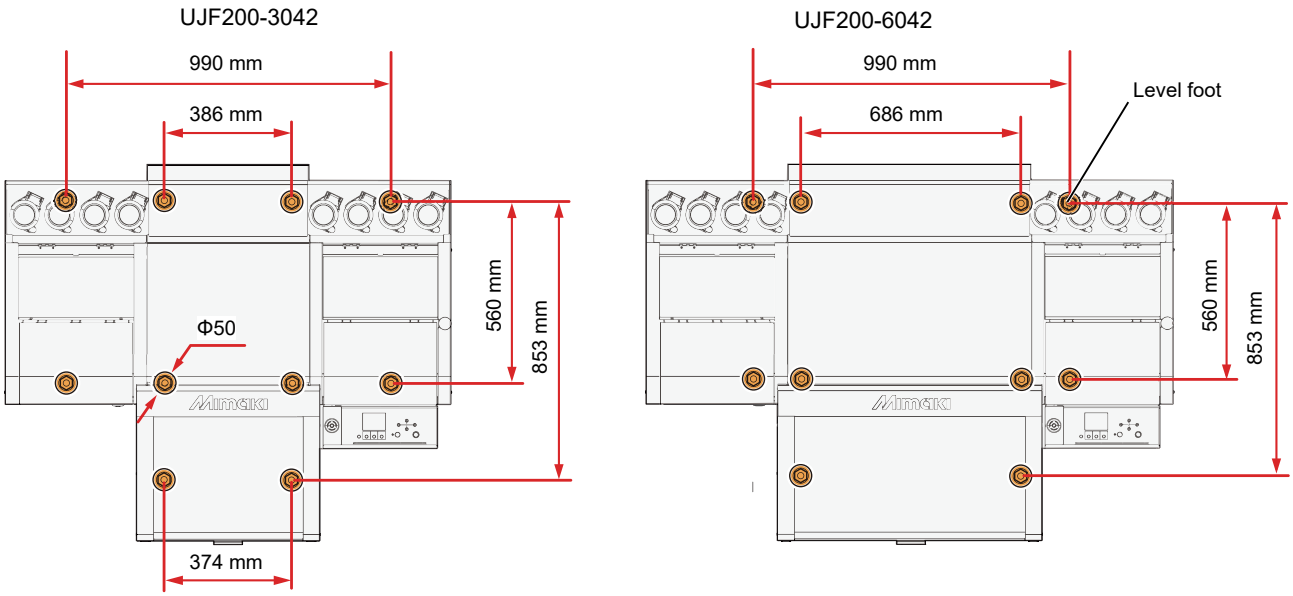

When you want to relocate the machine

Contact your local dealer or our service office. There is a risk of failure or damage to the machine if you try to move it yourself.

Safety Interlocks

For safety reasons, the machine is equipped with safety interlocks that stop operation if the cover opens during printing or other operations. (The area circled in red in the figure below)

If you open the cover while printing, the print job will be interrupted, and you will need to receive the RIP data again.

- Safety interlock locations

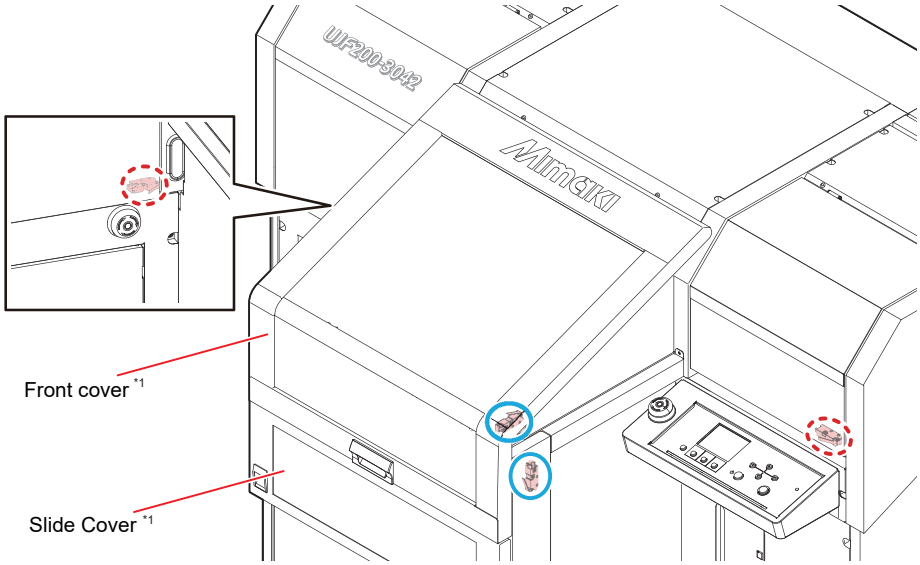

*1: Opening the front cover or slide cover while the machine is running will stop the carriage, but this is not a safety interlock. (The area circled in blue in the figure above)

Emergency Stop Switches

There are two emergency stop switches. Use this feature when you need to stop the machine immediately for safety reasons.

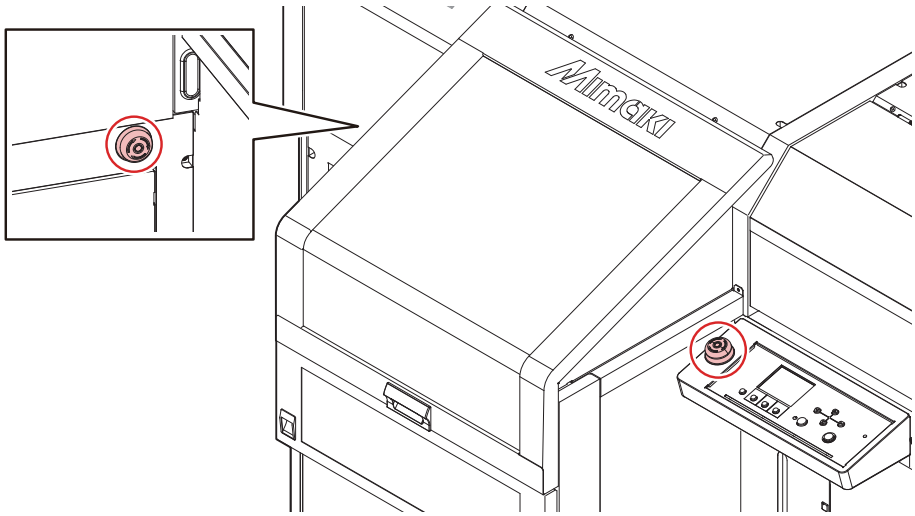

Important!

- Do the following after an emergency stop switch has been pressed.
  (1) Unplug the machine from the power outlet and resolve the problem.
  (2) After confirming safety, deactivate the emergency stop switch.

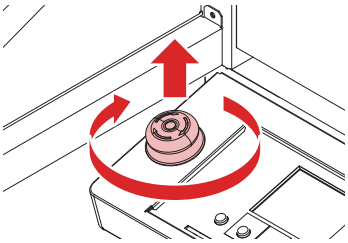

  (3) Plug the machine into the power outlet.

Warning Label

Make sure you fully understand the details indicated on the various warning labels.

If any labels are dirty, illegible, or peeling, contact your local dealer or our service office to obtain new ones.

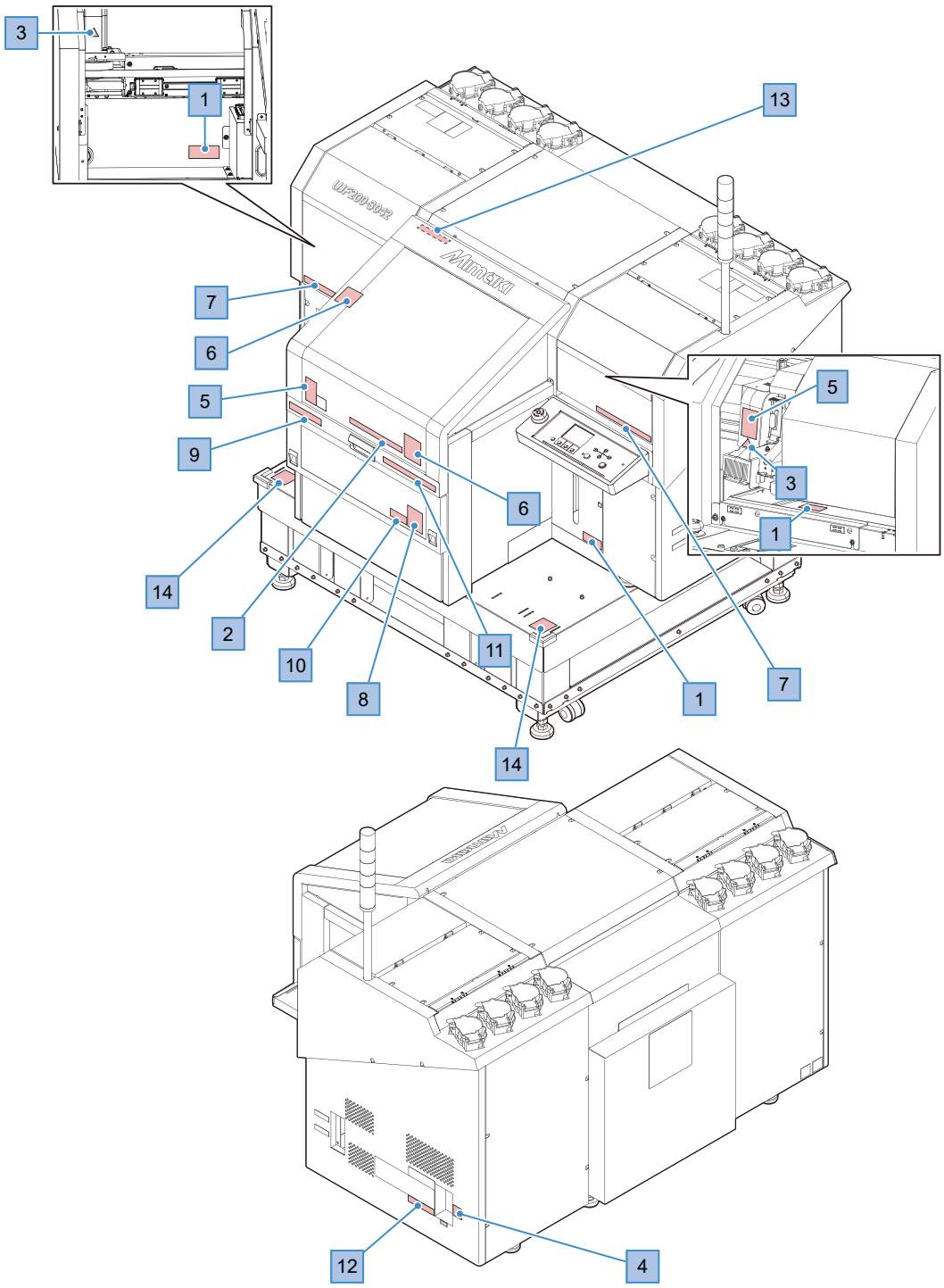

No.	Order code	Label	Details
1	M903330		There is a risk that liquids such as ink may splash and come into contact with your skin or get into your eyes. Please wear safety glasses and gloves when working.
2	M905811		Indicates dangerous moving parts. When the carriage is in operation, there is a risk of injury from crushing or shearing, so keep your fingers and body away from it.
3	M906144		Indicates hot parts. Do not touch the heater while it is turned on, as there is a risk of burns.
4	M907935		Indicates dangerous live parts. Do not touch this, as there is a risk of electric shock.
5	M913419		Beware of ultraviolet light. Exposure to ultraviolet rays may cause skin damage or eye problems. While the device is in operation, do not open the cover, look directly at the treatment area, or bring your hands or face close to it.
6	M913423		If the cover closes suddenly due to its own weight, there is a risk of pinching your fingers and causing injury. When opening or closing the cover, please hold it gently with your hand until it is fully open or closed, and operate it slowly.
7	M913425		Be careful of the laser beam. Looking directly at a laser beam may cause eye damage. Do not look directly into the laser.
8	M913610		Indicates dangerous moving parts. There is a risk of injury from crushing or shearing when the table is in operation. Please keep your fingers and body away from it.
9	M915076		This device is classified as a Class 1 laser product under IEC 60825-1 under normal operating conditions. Under normal operating conditions, the laser beam is confined within permissible limits in areas accessible to users.

No.	Order code	Label	Details
10	M921061		The machine emits ultraviolet light. (Risk Group 2) Exposure of the skin or eyes to ultraviolet (UV) light may cause inflammation, so please take care to avoid exposure to UV light.
11	M920704		Placing a load exceeding 20 kg on the table may cause damage. Please do not load items weighing more than 20 kg.
12	M920968	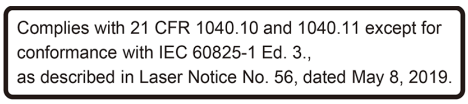	This label indicates that the machine complies with U.S. FDA regulations.
13	M921062		This device contains a laser light source classified as Class 2. Be careful of the laser beam when accessing the interior of the device. Looking directly at a laser beam may cause eye damage. Do not look directly into the laser.
14			This indicates a protrusion that is likely to come into contact with the foot. If your foot comes into contact with the protruding part, you may suffer injuries such as bruises. Please exercise extreme caution in the area surrounding the equipment.

Chapter 1 Before Use



This chapter

This chapter describes information essential before use, such as part names and installation methods.

Part Names and Functions 26
- Front 26
- Carriage 27
- Pilot Light (Indicator Light) 28
- Operating Panel 29

About the table 32
- Precautions When Placing Media on a Table 32
- About Tap Positions 33
- Important Notes Regarding Tables 34

Connecting the Power Cable 35
- Turning On the Power 36
- Turning Off the Power 37

Connecting a PC to the Product 38
- Using a USB Cable 38
- Using a LAN Cable 38

System Configuration 40
- Installing the Mimaki Driver 41
- Installing RIP Software 41
- Obtaining Color Profiles 41
- Setting Up RIP Software 41

Ink Replacement Method 43
- When Ink Near End is Displayed 43
- When Ink End is Displayed 43
- Replacing Ink 43

1.1 Part Names and Functions

Front

The following explanation uses the diagram inUJF200-3042.

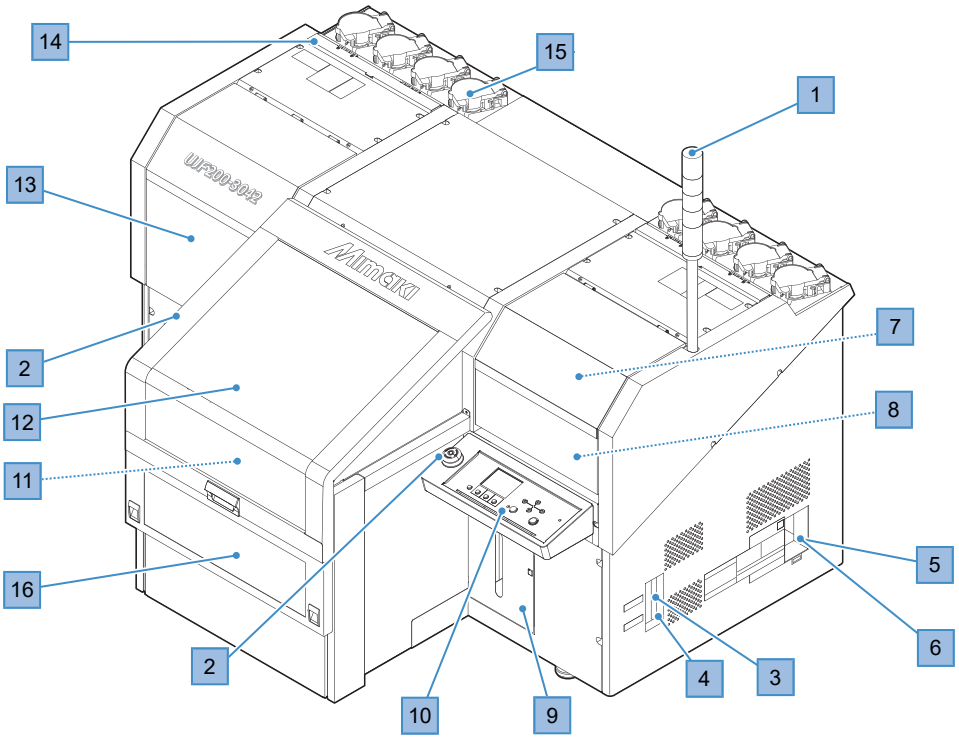

No.	Name	Overview
1	Indicator light	A light indicates the status of the machine. UJF200-3042is optional. Options may only be installed by service engineers.☞ "Pilot Light (Indicator Light)"(P. 28)
2	emergency stop switch	Press this button to stop the machine in case of an emergency. They are located at the rear right corner of the machine and next to the operating panel. UJF200-3042is optional. Options may only be installed by service engineers.☞ "Emergency Stop Switches"(P. 20)
3	LAN port	Used when using the network function. ☞ "Using a LAN Cable"(P. 38)
4	USB port	Connects to PC via a USB interface cable. ☞ "Using a USB Cable"(P. 38)
5	AC inlet	Used to connect the power cable (provided). ☞ "Connecting the Power Cable"(P. 35)
6	Main power switch	The main power supply for the machine. To prevent ejection failures (such as nozzle clogging or nozzle deflection), do not turn off the main power supply.☞ "Turning On the Power"(P. 36)
7	Carriage	Consists of parts such as the print head, UV-LED lamp, and jam sensor. ☞ "Carriage"(P. 27)
8	Capping station	It consists of components such as the NCU, which monitors the condition of the cap, wiper, and print head head nozzles.
9	Waste Ink Tank	Container for waste ink. ☞ "Maintenance of the Waste Ink Tank"(P. 104)
10	Operating Panel	Includes operating keys and displays indicating various settings and other items. ☞ "Operating Panel"(P. 29)
11	table	Print area. ☞ "About the table"(P. 32)

No.	Name	Overview
12	Front cover	Prevents dust and other particles from falling onto the media.
13	Maintenance cover	Open the cover and perform maintenance. Printing and the automatic maintenance function are not possible while the covers are open.
14	Ink IC chip slot	Insert the IC chips provided with the Ink bottle. This manages information on the Ink bottle.
15	Ink Supply Unit	The ink bottle is inserted here to supply ink to the print head. ☞ "Ink Replacement Method"(P. 43)
16	Slide Cover	Use this to lower the workpiece when replacing thick workpieces.

Carriage

The carriage is equipped with a print head for printing, a LED UV unit, and a light pointer inside the print head cover.

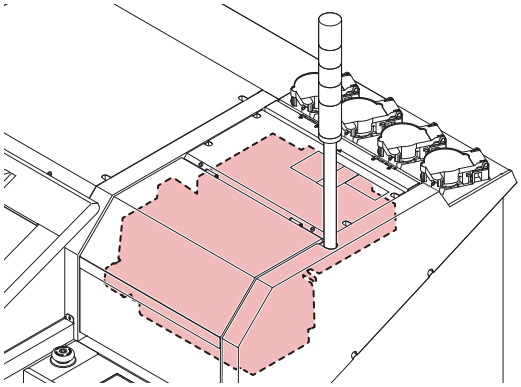

Even through the front cover, do not look directly at the light emitted by the LED UV with the naked eye. Depending on the print conditions, very bright light may be emitted.

Please wear the included safety goggles.

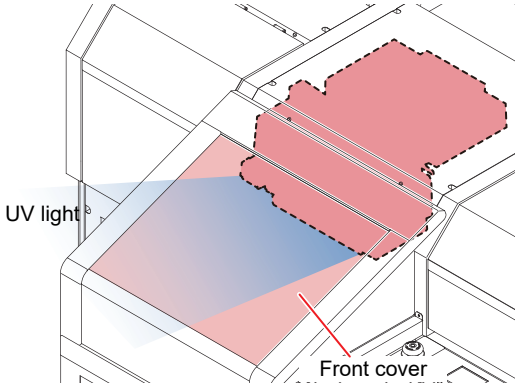

Pilot Light (Indicator Light)

The indicator light unit uses three different colors to indicate the status of the main unit.

The indicator light unit is an optional accessory for the UJF200-3042.
To use this option, installation by one of our service engineers is required.
Please note that customers are not permitted to install optional accessories on the main unit.

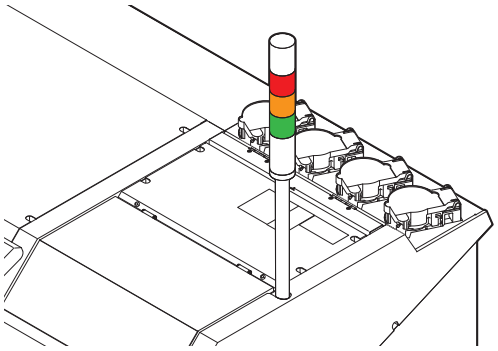

Color	Status	Overview
Red	Illuminated	Error Levels 2 and 3[*1] have occurred . Due to a system outage or similar issue, printing is not possible.
	Off	The printer is operating normally.
Yellow	Illuminated	Error Level 0, 1[*1] occurred A recoverable error has occurred. Please check the message displayed and take the necessary action.Problems Indicated by Messages
	Off	The printer is operating normally.
Green	Illuminated	The device is in the standby state with the power on.
	Flashing	Indicates printing is underway.
	Off	The power is off.

*1. Error Level

- 0: Information: Ink near-end, etc.
- 1: Warning: Light curtain detection in progress, etc.
- 2: Error: Ink leak, etc.
- 3: Emergency: Y-limit sensor activation, etc.

- Printing will not start if the error level is 1 or higher.

Under no circumstances should you disassemble or modify this option or the printer itself. This may be a cause of electric shock or failure of equipment.

If you continue to use the product while it is exhibiting abnormalities—such as smoke or a strange odor—it could cause a fire or electric shock. Immediately turn off the power switch, and then be sure to unplug the device from the outlet. After confirming that no smoke is coming out, please contact your dealer or one of our service offices to request repairs.

Attempting to repair the product yourself is dangerous, so please do not do so under any circumstances.

Operating Panel

The operating panel is used to configure print settings and perform various operations.

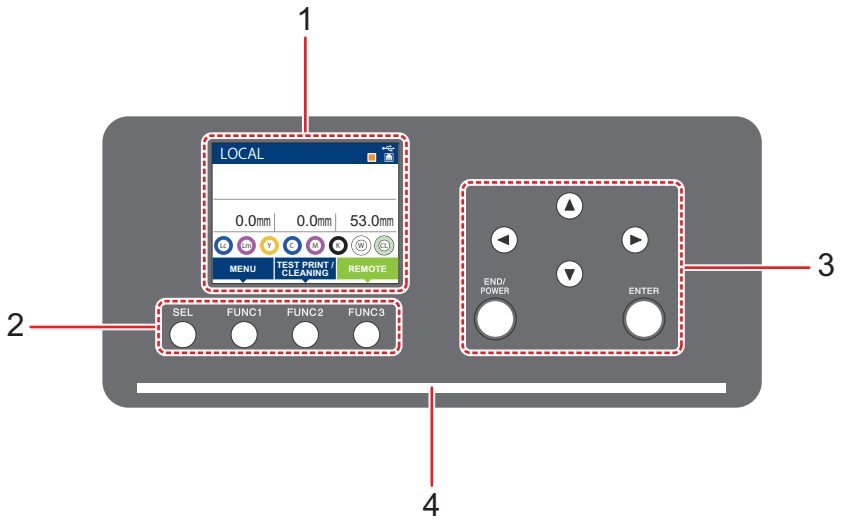

1	Display	The following items will be displayed. • Condition of the Machine • Ink status ☞ "About the Ink Level"(P. 30) • Functions assigned to [FUNC1] through [FUNC3] ☞ "Functions assigned to [FUNC1] through [FUNC3]"(P. 30)	
2	[SEL] key	Switches the functions of the function buttons ([FUNC1] through [FUNC3]).	
	[FUNC1] / [FUNC2] / [FUNC3] keys	Press this button when configuring various functions or performing test printing. The function of the function button changes each time you press [SEL].	
3	Jog Key ◀ ▶ ▲ ▼	Use this to move the head or media in local mode, and to select various settings.	
	[END/POWER] key	Use this to cancel the settings you just entered or to go back one layer in the settings menu. You also press it to turn the power on or off. (To turn off the power, press and hold the button.)	
	[ENTER] key	Use this to move to the next lower layer of the menu or to confirm a setting.	
4	Status Indicator Light	This lamp indicates the machine status.	
	Illuminated Lamp Status and Device Status	Off	Indicates LOCAL mode. Used for test printing, maintenance, and settings
		Light is illuminated in blue	Indicates REMOTE mode. The product is in standby to receive print data.
		Light blue flashing	Indicates that printing is in progress. This also flashes to indicate test printing—for example, when printing built-in patterns.
		Blue light illuminated	Indicates that data remains to be printed. Switch to REMOTE mode and start printing

		Flashing green	Indicates that automatic maintenance is underway. Some functions will be limited until maintenance has ended.
		Yellow flashing light	Ink Near End status (very little ink remains). ☞ "When Ink Near End is Displayed"(P. 43)
		Flashing red	An error has occurred. Refer to the error code list and take appropriate action. ☞ "Error Message"(P. 117)
		Red light illuminated	A system error (SYSTEM HALT) has occurred. Contact our service office. ☞ "SYSTEM HALT"(P. 125)

When you turn the power switch on, the [ENTER] key on the operating panel is illuminated blue; when you turn it off, it is off.

Even if you turn off the power, the system will automatically enter maintenance mode. Automatic Maintenance Function

Do not turn off the main power supply switch (on the back).

About the Ink Level

The display shows the status of the ink tanks (ink levels, errors, etc.) using icons.

Here is an explanation of each icon.

Icon	Details								
	The ink levels are displayed on a 9-point scale in the order in which the ink cartridges are installed in the ink slot. As you move to the right, the ink levels decrease.								
									
	Ink Full	About 1/8 used	About 1/4 used	About 3/8 used	About half used up	About 5/8 used	About 3/4 consumed	About 7/8 used	Near End
	Indicates that the ink is at the ink end or there is an ink error.								
	Indicates that the ink is expired or has been expired for one month. Please use it as soon as possible. If the ink is expired for more than two months, it will no longer work.								

Functions assigned to [FUNC1] through [FUNC3]

This section explains the functions assigned to [FUNC1] through [FUNC3].

Icon	Details
	The “MENU” screen for configuring each function will appear.
	Maintenance functions such as test printing and cleaning will be displayed.
	In local mode, switch to REMOTE mode and start printing.
	Execute the data clear.
	Pause printing remotely and switch to local mode.

Icon	Details
TABLE-DOWN	Lower the height of the table.
TABLE-UP	I'll raise the height of the table.
>>	On screens such as the MENU screen, if there are multiple items, you will be taken to the next page.
<<	On screens such as the MENU screen, if there are multiple items, this takes you back to the previous page.
OK	Use this when you need to confirm an action, such as when a warning message appears.
OFF	Use this to turn a feature “OFF” or disable it.
↓	A setting or feature has been assigned. Please follow the instructions for each function.
✓	Toggle this setting on or off when selecting multiple items, such as the heads for head cleaning.
VACUUM	Turns the exhaust fan on or off.
ORIGIN SETUP	Set the origin.

The icon color changes depending on the machine's status.
When the icon is green: The machine is in remote mode.
When the icon is navy blue: The machine is currently in local mode.

Regarding Ink Temperature

The ink heating status and errors are indicated by different colors.

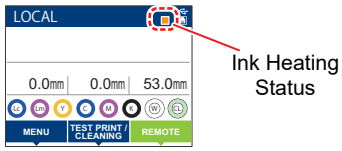

- Orange: Adjusting to temperature setting. Ink heating starts automatically before printing.
- Light blue: Temperature being maintained stable after reaching temperature setting.
- Green: Ink temperature is stable. Printing can be started immediately.
- Gray: Ink heating is turned off.
- Red: An ink heating related error has occurred.

1.2 About the table

To load various types of media for printing, you need to adjust the table height to match the thickness of the media.

The specifications for each table are listed below.

	UJF200-3042	UJF200-6042
Maximum Media Weight *1	20 kg or less	20 kg or less
Vacuum Function	None (optional)	Available
table movement range	0 to 250 mm	
Media thickness	0 to 250 mm (6 inches)	

*1. If you place items heavier than the specified weight on the table, it may warp, resulting in reduced image quality.

Precautions When Placing Media on a Table

- When placing media on the table, be careful not to slam it down. There is a risk that the table may be damaged.
- When placing media weighing more than 10 kg, please follow the guidelines in the graph below to ensure that no excessive uneven load is placed on the table.
  If the values exceed the range shown in the graph below, the table may become corrupted.

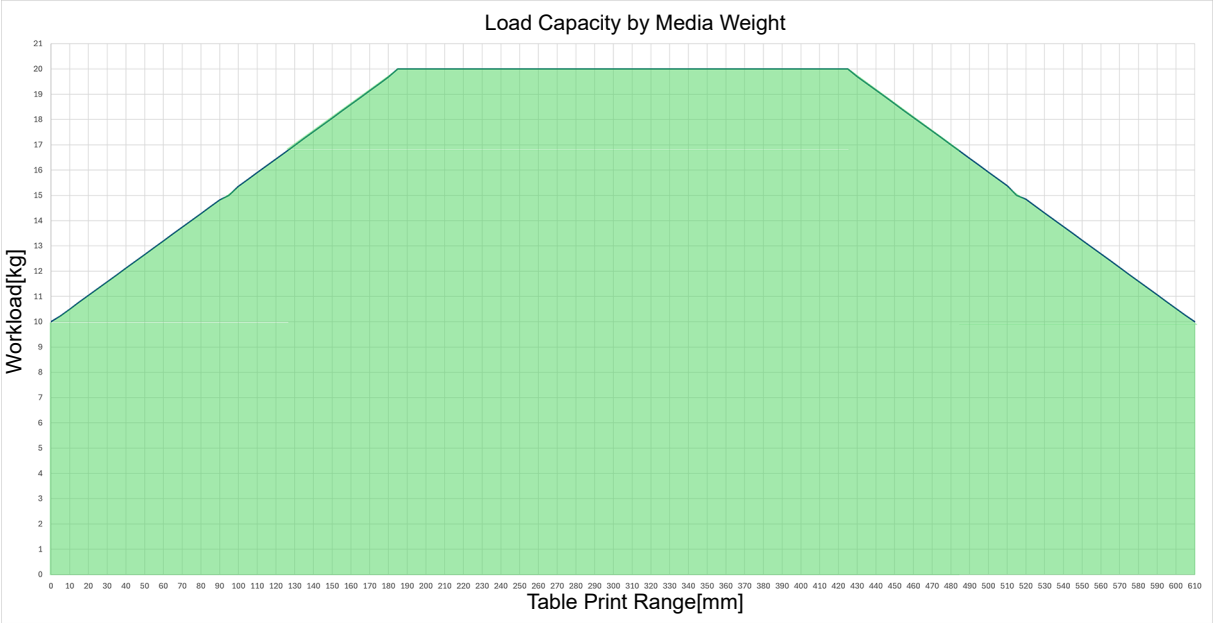

About Tap Positions

The table for mounting media and the suction table each have M4 taps (UJF200-3042: 14 taps,UJF200-6042: 18 taps) with the following dimensions.

The tapped hole (indicated by the red circle in the figure) can be used with a jig. The positions of the other holes may be changed without prior notice. Please make sure the jig does not extend beyond the table.

UJF200-3042

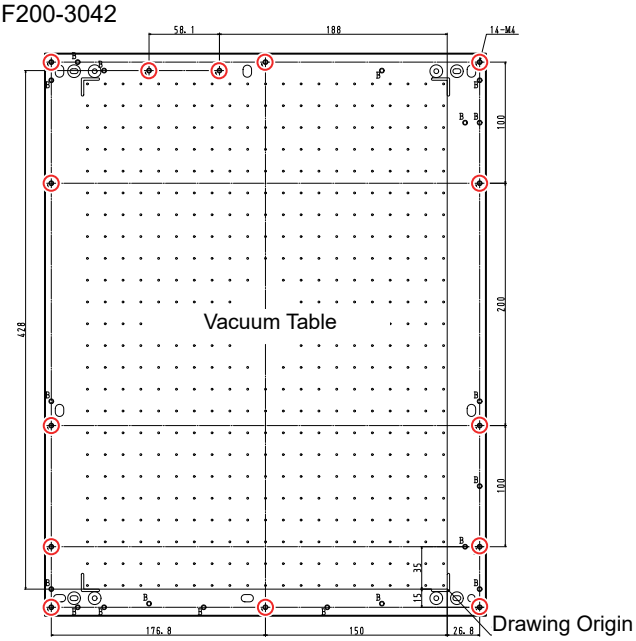

*The suction table for the UJF200-3042 is optional.

UJF200-6042

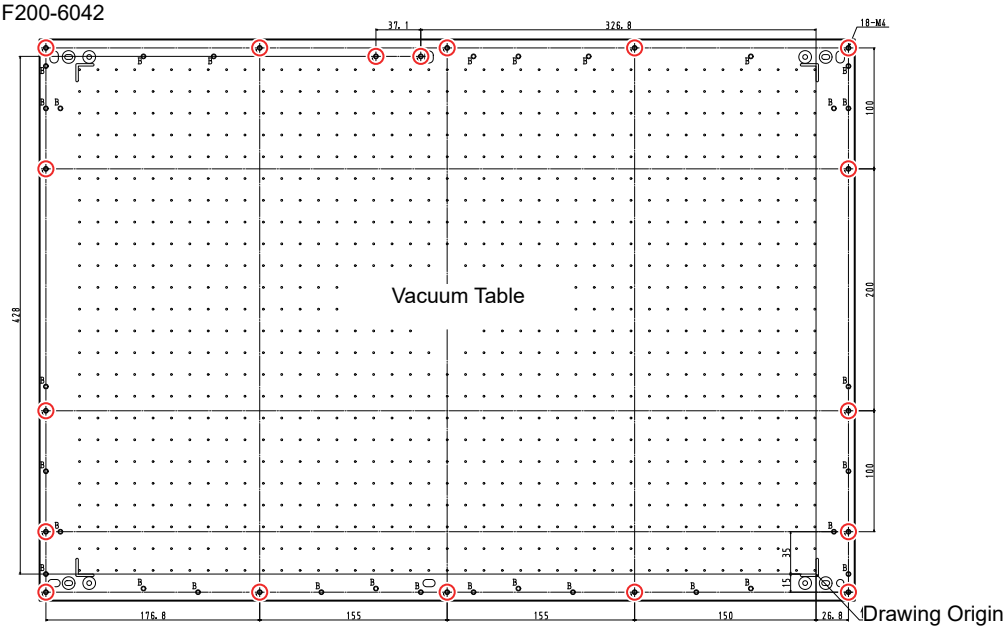

Important Notes Regarding Tables

When using the jig, please ensure the dimensions are as follows: width UJF200-3042: 364 mm (equivalent to A3) /UJF200-6042: 620 mm (equivalent to A2), and rear depth 464 mm or less.

If you set the size larger than the one listed above, the table will no longer be able to move.

UJF200-3042

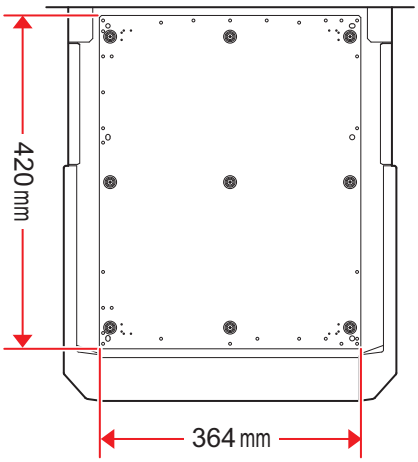

UJF200-6042

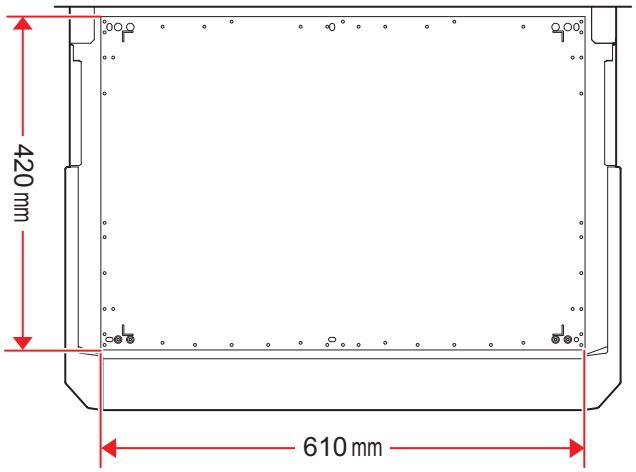

1.3 Connecting the Power Cable

1 **Check to confirm that the main power supply is turned off.**

2 **Plug the power cable into the inlet of the machine.**

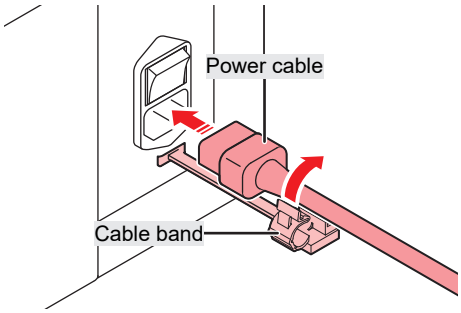

3 **Plug the power plug into the power outlet.**

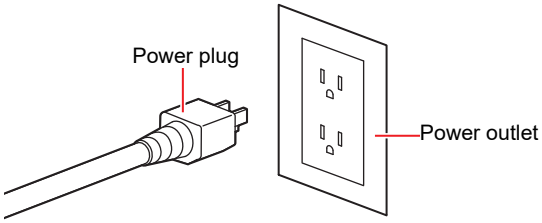

- Do not handle the power plug with wet hands. Disregarding this precaution may result in electric shock.

Turning On the Power

1 **Check to confirm that the main power supply is turned on.**

- If the main power supply switch is not turned on, set to "I".

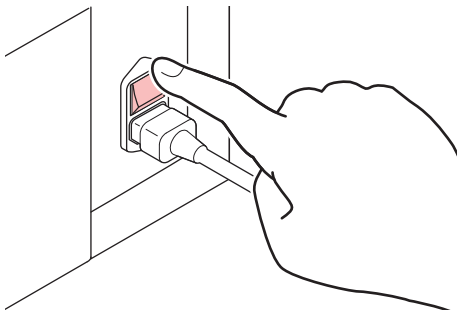

2 **Press the [END/POWER] key to turn on power.**

- The firmware version appears on the display, and the initial operation is executed. LOCAL mode is then set and the machine is ready for use.

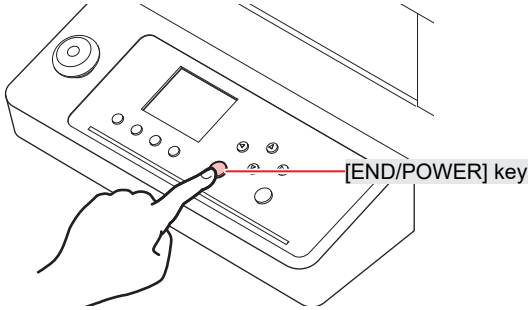

3 **Turn on the power for the connected PC.**

Turning Off the Power

- Check the following when turning off power:
  (1) The front cover and maintenance covers are closed.
    - Leaving any of the covers open will disable the automatic maintenance function (including nozzle clogging prevention function and waste ink draining channel cleaning function).
  (2) The carriage has returned to the capping station.
    - If not, the print head nozzle may dry out, resulting in ejection failures (such as nozzle clogging or deflection).
  (3) Data is not being received
  (4) No errors have occurred.
    - Warning/Error Messages

1 **Press the [END/POWER] key.**

- The power-off confirmation screen will appear.

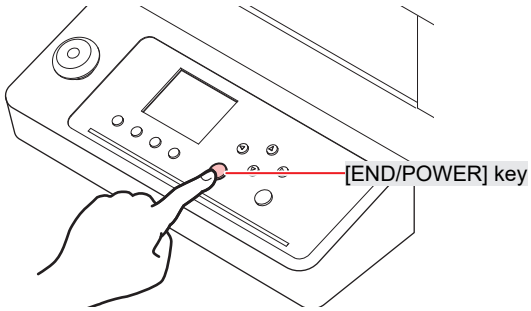

2 **On the power-off confirmation screen, select “Standby” or “Power Off.”**

- Standby:
  When the machine enters the standby state, it will start up quickly the next time it is turned on.
- Power Off:
  The next time the power is turned on, the system will initialize the PCB and motor before starting up, so it will take longer to start up than if you had selected “Standby.”

- Do not turn off the main power supply. Turning off the main power supply will disable the automatic maintenance function (including nozzle clogging prevention function and ink discharge channel cleaning function). This increases the risk of ejection failures (such as nozzle clogging or deflection).

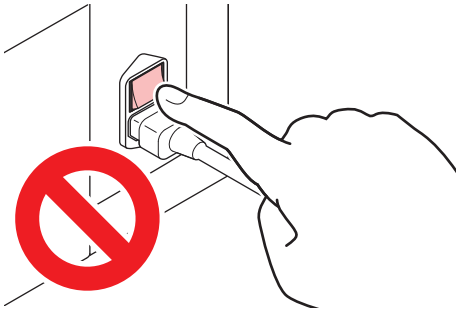

- If the printer is not operated or used for modeling for a certain period of time, it will automatically turn off. When the power is turned off at this point, the system will be in the same state as when it was turned off following the previous key press. The next time you use the machine, please press the [END/POWER] key before turning it on.

3 **Turn off the power to the PC connected.**

1.4 Connecting a PC to the Product

Using a USB Cable

Connect a PC to this product using a USB interface cable.

- Do not unplug the cable while data is being transferred.

- If the PC does not have a USB port, contact your local distributor, our sales office, or service center.

USB Connection Precautions

When connecting more than one UJF200-3042/6042 to a PC

The UJF200-3042/6042 may not be correctly recognized.

If the PC has more than one USB port, try connecting to a different USB port to check whether the product is correctly recognized. If the product is still unrecognized even when connected to a different USB port, use a commercially-available USB active repeater cable.

When extending the USB cable

Use a commercially-available USB active repeater cable. However, make sure that the combined length of the USB cable and the USB active repeater cable does not exceed 20 m.

If the connection is extended with a USB cable, data transfer speeds to the machine may be reduced, causing the carriage to pause at the left or right end during printing.

USB high-speed mode peripheral devices

It may not be possible to recognize USB peripheral devices if USB high-speed mode peripheral devices (e.g., USB memory, USB HDD devices) are connected to the PC to which the product is connected. Data transfer speeds to the machine may be reduced if external USB hard disk drives or similar devices are connected. This may cause the carriage to pause at the left or right end during printing.

Unplugging USB memory devices

When unplugging USB memory devices from the PC to which this product is connected, use "Stop" in "Safely removing hardware" before unplugging. Otherwise, an [ERROR 201 Command Error] will occur.

Using a LAN Cable

Connect a PC to this product using a LAN cable. Insert a LAN cable until it engages with a click.

- Do not unplug the cable while data is being transferred.

Checking the LAN connection

1 **Check the display on this product.**

- Local guidance can be used for checking. Displaying machine information (local guidance)
- Printing is not possible if "100Mbps", "10Mbps", or "No Connect" is displayed. EVENT MAIL can be used. Event Email Function Settings

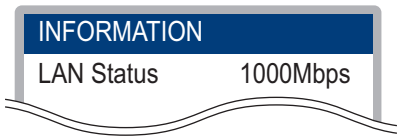

2 **Check the lamp on the LAN connector.**

- The LAN connector lamp illuminates when the machine is running.

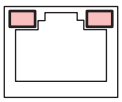

Color	Status	Overview
Green	Illuminated	Connected via 1000BASE-T
	Off	Connected via a network other than 1000BASE-T • 1,000 Mbps is not supported if only the orange lamp is illuminated or flashing. Check the specifications for the PC, peripheral devices, and cable.
Orange	Illuminated	Linked up (connected).
	Flashing	Data being received
	Off	Link down (not connected)

Precautions When Connecting via a Network

Please set up the network in the following environment. Printing is not possible if the network is not set up correctly.

- Use a Category 6 or 6A LAN cable.
- Set up the machine and the computer used to transfer print data on the same network. This product cannot be connected via a router.
- Use a 1000BASE-T compatible computer or switching hub. Printing requires 1000BASE-T support.

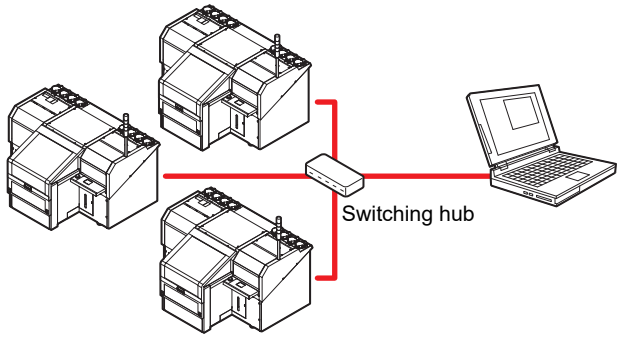

1.5 System Configuration

Use RIP software to request to print data created using applications like Illustrator or Photoshop.

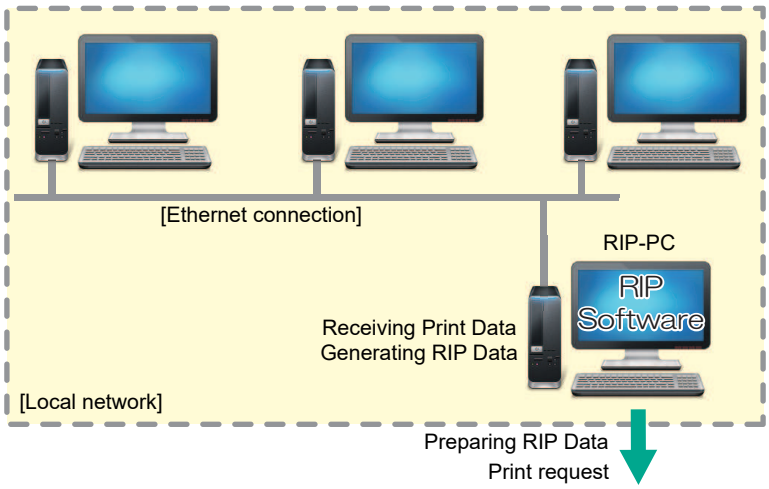

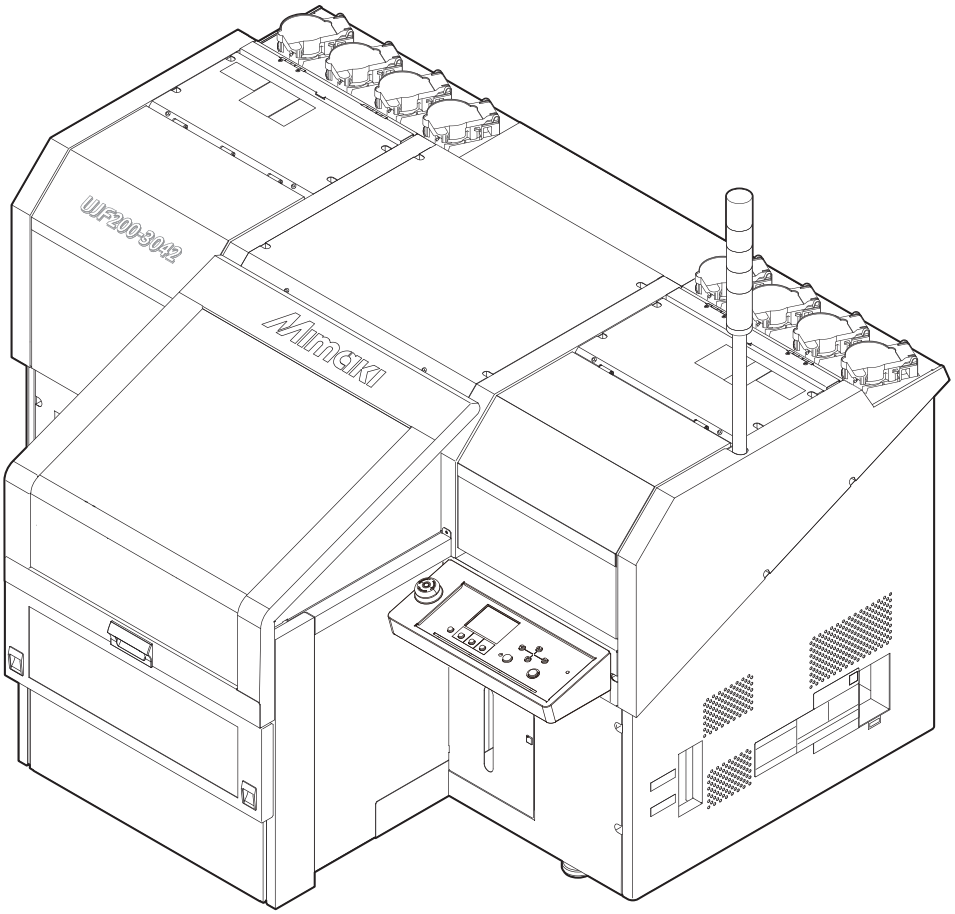

Installing the Mimaki Driver

1 **Download the Mimaki driver from our website.**

- https://mimaki.com/download/inkjet.html
  [UJF200-3042/6042] > [Driver/Utility]

2 **Install the MIMAKI driver.**

Installing RIP Software

The explanation here applies to MIMAKI RIP software (RasterLink).

1 **Install RasterLink.**

- The following icon appears on the PC desktop once the software has been installed.



- For more information, refer to the RasterLink installation guide. https://mimaki.com/download/software.html



- Once installed, activate the license for Rasterlink. Otherwise, "Profile Update" will not start.

Obtaining Color Profiles

Print quality (e.g., tone, bleeding) will vary depending on the media and ink set. To maintain consistent print quality, select a color profile that suits the media and ink set.

- The RasterLink Series includes a function allowing color profiles to be downloaded and installed directly from the Internet. For more information, refer to "Installing Profiles" in the RasterLink Series installation guide.
  https://mimaki.com/download/software.html
  [RasterLink Series used] > [Manuals]

Setting Up RIP Software

The explanation here applies to MIMAKI RIP software (RasterLink).

1 **Launch RasterLink.**

- The [Printer Management] screen appears.
- To add a new model, launch RasterLink, then select [Environment] > [Printer Management] for registration.

2 Register UJF200-3042/6042.

(1) Click [Add].

(2) Set the specifics for UJF200-3042/6042.

- Model: Select the model.
- Color: Select the ink set filled.
- Output Port: Select the cable connected.
- Available Printers: Select UJF200-3042/6042 connected.
- Printer: Enter a name as required.

(3) Click [OK].

- A confirmation screen appears.

(4) Click [Yes].

- Printer registration starts.



- For more information, refer to the RasterLink installation guide. https://mimaki.com/download/software.html

1.6 Ink Replacement Method

When Ink Near End is Displayed

Ink levels are low. We recommend replacing with new Ink bottle as soon as possible. Please be aware that the ink may run out while printing.

To check which Ink bottle needs to be replaced, press the [ENTER] key on the LOCAL mode screen.
Displaying Machine Information (Local Guidance)

When Ink End is Displayed

The ink has run out. Replace with new Ink bottle.

Thoroughly read the following and make sure you understand its contents.
Ink and other liquids used with this machine



- Pay close attention to ventilation and be sure to wear safety glasses, gloves, and a mask when handling ink, maintenance liquid, waste ink, or other solutions used with the machine. Leaking ink may adhere to the skin or get into the eyes or mouth.

Replacing Ink

● Removing the Ink bottle

1 **Rotate the lever on the tank section from left to right.**

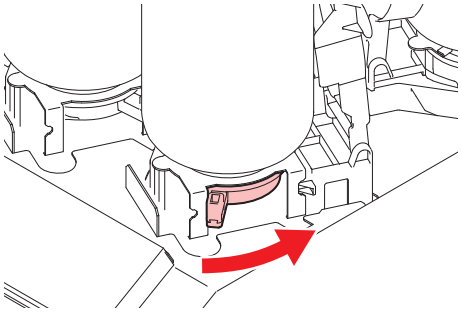



- Never attempt to rotate the ink bottles. Doing so may result in leaking ink.

2 Lift the ink bottles vertically.

- We recommend using the included PP tray to prevent ink from dripping onto the main unit.

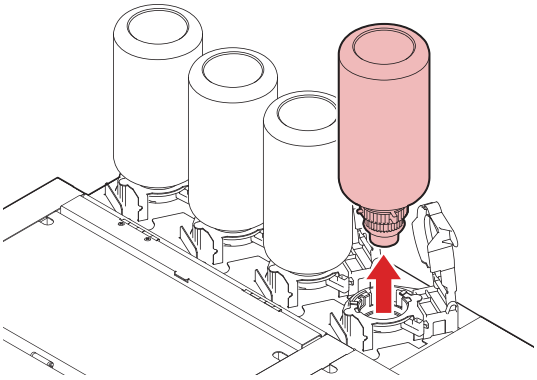



Included

- Check to confirm that the light-blocking cover is closed when removing ink bottles. Close the light-blocking cover by hand if it is open. If the light-blocking cover is left open, the ink may harden, resulting in printer failure.
- Be careful to prevent ink leaks from the ink bottles.

Important!

- The O-rings fitted to the bottle caps may become detached when removing ink bottles. Refit the O-ring if it becomes detached.

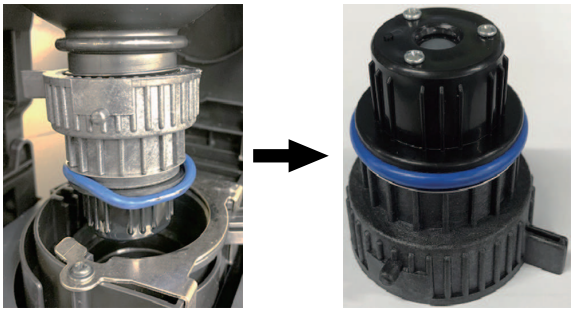

3 Wipe off any ink on the ink bottle caps with paper wipes.



- Check to confirm that there is no foreign matter, such as non-woven fabric scraps or dust, adhering to the ink bottle caps. Continuing to use it when it is dirty may result in foreign matter blocking the ink channels, causing ink leakage.

4 Remove the cap from the ink bottle.

- If the ink bottle caps are tight, remove using a tightening tool.

5 **Open the IC covers.**

- There is an IC cover on each of the left and right bottle mounting sections.

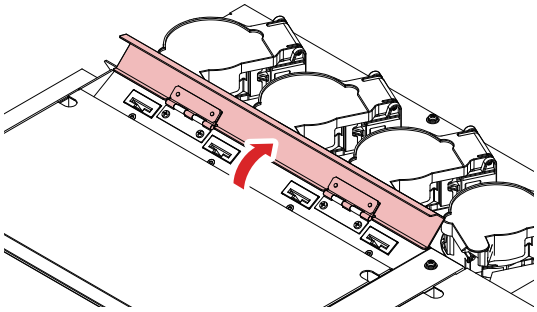

6 **Remove the ink IC chip.**

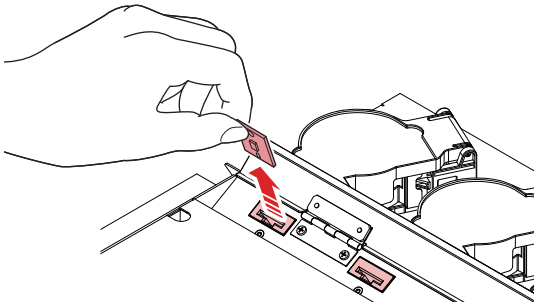

7 **After inserting the IC chip, close the IC cover.**

● Preparing the Ink bottle

1 **Shake the Ink bottle to the left and right slowly at least 20 times.**

- Tighten the ink bottle lid securely, then shake the bottle slowly from left to right to ensure that the ink moves inside, holding the ink bottle lid with a piece of recommended non-woven fabric.

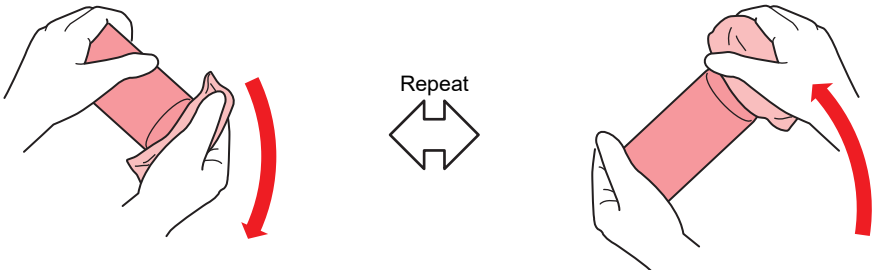

- Shake slowly. If the bottle is shaken too violently, ink may leak out or the air mixed in the ink may cause nozzle clogging.
- If the ink bottle is partially used, tilt it slowly until the ink bottle is upright.

2 **Remove the ink bottle lid.**

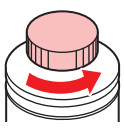

Important! If the mouth of the ink bottle is fitted with a seal

- Cut the seal open using a craft knife. There is a risk of ink leakage if parts of the seal remain.

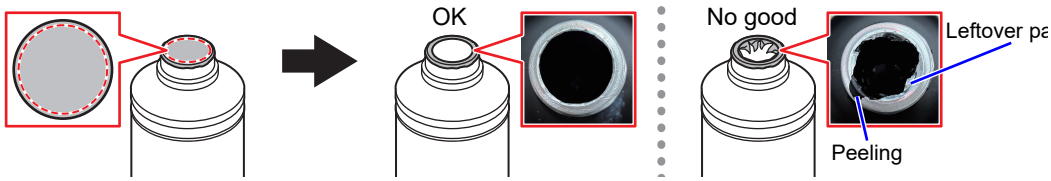

- Take care not to damage the mouth of the ink bottle or the area where the seal is attached. There is a risk of ink leakage if the mouth is damaged.
- Be careful not to drop any of the seal fragments into the ink bottle. If the ink bottle is used with seal fragments inside, these may clog the bottle cap, preventing ink from being supplied.

3 Attach the special caps to the ink bottles.

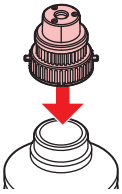

- Wipe off any ink or maintenance liquid remaining on the ink bottle or the bottle cap. Otherwise, there is a risk of ink leakage due to loosening of the ink bottle cap.

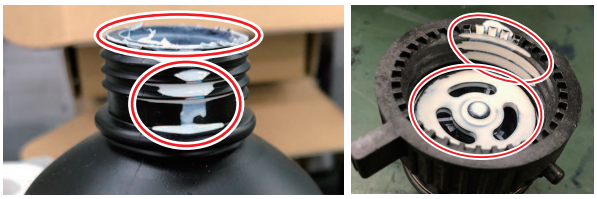

- Check to confirm that there is no foreign matter, such as paper towel scraps or dust, adhering to the ink bottle caps. If foreign matter is present, this may block the ink path and lead to leakage.

4 Use the tightening jig to tighten the special caps.

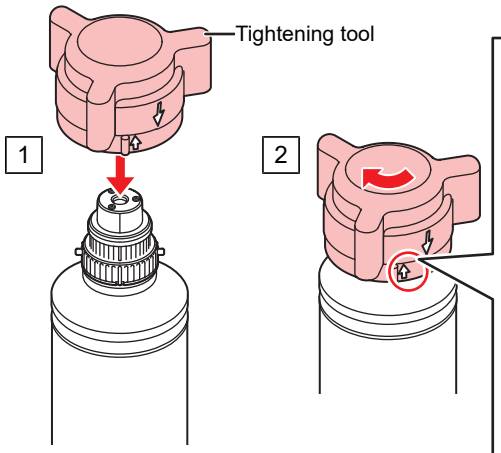

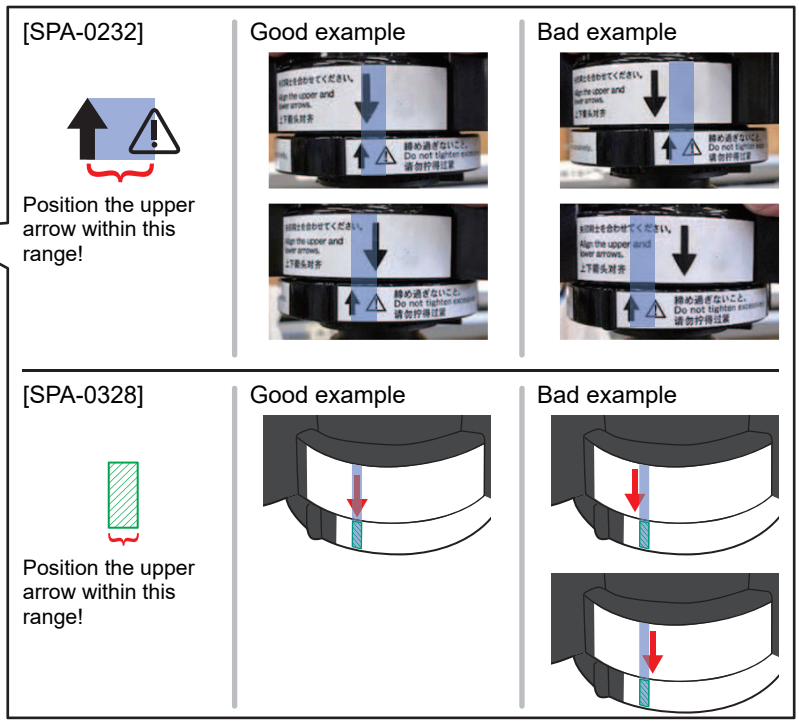

- Do not overtighten the ink bottle caps. Disregarding this precaution may result in damage, idling, or ink leakage. If the arrow goes beyond the range indicated above, loosen the bottle cap and repeat the steps again.
- Do not leave ink bottles with the ink bottle caps fitted for extended periods. Disregarding this precaution may result in the ink hardening.

5 Turn the ink bottle upside-down to check that no ink leaks occur.

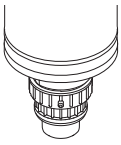

● Loading the Ink bottle

The order of Ink bottle to be set depends on the ink set you are currently using. Check the ink slot numbers, then insert the correct color Ink bottle.

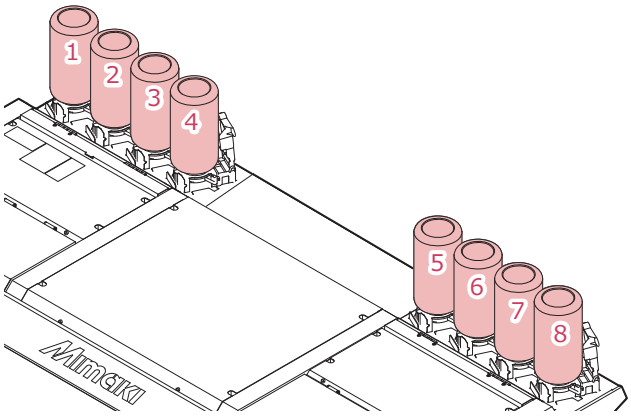

Ink Type	Ink set	Bottle Set							
		1	2	3	4	5	6	7	8
ELH-100 ELS-120 EFS-150	4C + Cl + Pr + W	M	C	Y	K	Cl	Pr	W	W
	6C + W	M	C	Y	K	Lc	Lm	W	W
	6C + Cl + W	M	C	Y	K	Lc	Lm	W	Cl
	6C + Pr + W	M	C	Y	K	Lc	Lm	W	Pr
	6C + Cl + Pr	M	C	Y	K	Lc	Lm	Cl	Pr
	4C + Fy + Fp + W	M	C	Y	K	Fy	Fp	W	W
	4C + Fy + Fp + Cl + W	M	C	Y	K	Fy	Fp	W	Cl
	4C + Fy + Fp + Pr + W	M	C	Y	K	Fy	Fp	W	Pr
	4C + Fy + Fp + Cl + Pr	M	C	Y	K	Fy	Fp	Cl	Pr

1 Insert the ink bottle into the tank.

- Turn the lever on the tank all the way from the left to the right, and then insert the ink bottle.

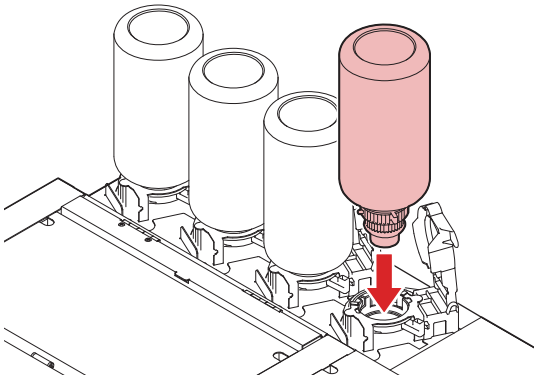

- You may apply the maintenance liquid onto the O-ring of the ink bottle caps so that the ink bottle can be inserted easily. Use the appropriate maintenance liquid to suit the ink being used.



2 Turn the tank lever from the rear toward the front to lock it in place.

- Never attempt to rotate the ink bottles. Doing so may result in leaking ink.

- Once the ink bottle is mounted, use up the ink as quickly as possible.

3 **Open the IC covers.**

- There is an IC cover on each of the left and right bottle mounting sections.

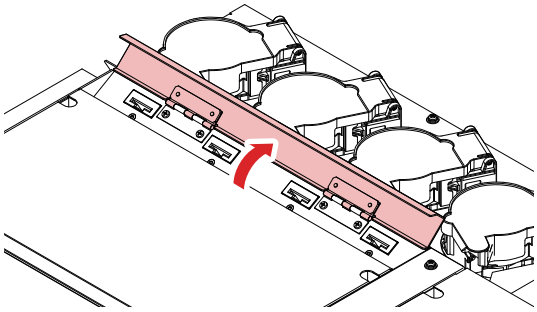

4 **Insert a new ink IC chip into the slot on the ink supply unit.**

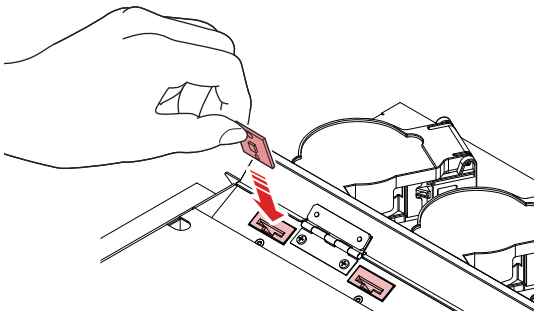

- Insert the ink IC chip with the metal side facing up. Inserting it in the wrong way may cause failure of the machine or damage the ink IC chip.

- Do not touch the metal parts of the ink IC chip. Static electricity may damage the ink IC chip, and dirt or damage may cause the ink IC chip read error.

5 **After inserting the IC chip, close the IC cover.**

- **Ink IC chips**

  The marking on the ink IC chip indicates the color information.

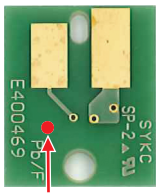

Marking locatio

Ink Color	Marking
Cyan	(One blue circle)
Magenta	(One red circle)
Yellow	(One yellow circle)
Black	(One black circle)
Light cyan	(Two blue circles)
Light magenta	(Two red circles)
Fluorescent pink	(Two orange circles)

Ink Color	Marking
Fluorescent yellow	●● (Two yellow circles)
White	○ (One white circle)
Clear	○○ (Two white circles)
Primer	○○○ (Three white circles)

- Insert the ink IC chip included in the package with the ink. The ink IC chip stores information such as the ink color, remaining amount, and expiration date. Printing is not possible if an incorrect ink IC chip is inserted.

- A "SYSTEM ALARM" message may appear when you remove or reinsert the ink IC chip. If you are unable to print even after inserting a new ink IC chip, please clear the ALARM.

Chapter 2 Basic Operation



This chapter

This chapter describes preparations of ink/media for printing, procedures before printing and settings.

Print Process 52
Loading the Media 53
Media 53
Set the media thickness 54
Changing the origin 54
Loading the Media..... 55
Test Printing 57
Perform test printing using the white calibration test pattern..... 58
Print Data 59
Starting Printing 59
Cancel Printing.....59
Confirming Whether Print Data Is Being Received or Has Been Received 60
If “! Work High” is displayed, ...60
If you open the cover while printing 60

2.1 Print Process

1. Turning On the Power

☞ "Turning On the Power"(P. 36)

2. Connect a RIP PC to the machine.

☞ "Using a USB Cable"(P. 38)
☞ "Using a LAN Cable"(P. 38)

3. Setting Up RIP Software

☞ "Installing RIP Software"(P. 41)(First time only)
☞ "Obtaining Color Profiles"(P. 41)
☞ "Setting Up RIP Software"(P. 41)(First time only)

4. Loading the Media

☞ "Loading the Media"(P. 53)

5. Print Data

☞ "Print Data"(P. 59)

6. Turning Off the Power

☞ "Turning Off the Power"(P. 37)

2.2 Loading the Media

Important! The outer edge of the media may warp due to heat. Please use adhesive tape or similar materials to secure it in place as a backup measure.

Media

This section explains the supported media sizes and how to handle them.

UV ink prints contain a small amount of ink residue that has not fully hardened. In addition, unreacted ink components may be harmful to humans. Therefore, this product is not suitable for printing for the following purposes; please verify the intended use in advance.

(1) Food Packaging Applications

(2) Toys and other items that children might put in their mouths

(3) Clothing and other items made of fabric, leather, etc., that may come into direct contact with the human body

(4) Medical devices that come into direct contact with the human body or that may be inserted into the human body, etc.

Supported Media Sizes

	UJF200-3042	UJF200-6042
Maximum width	300 mm	610 mm
Maximum length	420 mm	420 mm
Maximum printing width	300 mm	610 mm
Maximum Print Length	420 mm	420 mm
Media thickness	250 mm or less (9.8 inches)	
Weight	Max. 20 kg	

Media Handling Guidelines

To prevent equipment damage and printing defects, please note the following:

Media Size Variation
Do not use sheet-type media that has just been removed from its packaging. The media size may vary depending on the temperature and humidity in the room. After opening, the product must be left exposed to the outside air at the location where it will be used for at least 30 minutes.

Media Warp
For sheet media, please use media that is flat or that warps downward with the print side facing up (with the center raised). For media that tends to warp, store it so that it curves downward—for example, by placing it on a base or pallet that is slightly smaller than the media itself.
Do not use media that warps or becomes distorted.

Please do not place any objects on the surface of the coated paper. Depending on the type of coated paper used, discoloration may occur.

Do not use media that is curled and cannot be properly secured, or media that shifts when the table is moved. Please secure the media with tape or similar before use.

Set the media thickness

1 **In local mode, press [FUNC1] (MENU).**

2 **Press ▲ ▼ to select “Head Height.”**

3 **Press the [ENTER] key.**

4 **Select “Media Thickness” and press the [ENTER] key.**

5 **Press ▲ ▼ to set the media thickness.**

6 **Press the [ENTER] key.**

When using a jig, enter the jig height plus the media thickness.
Please avoid placing media in a way that creates concentrated loads.

Changing the origin

Change the origin—which is set at the time of purchase—using the jog keys ▲ ▼ ◀ ▶ or the "Origin Setting Menu" ☞ "Origin Setting Menu"(P. 65). This section explains how to make changes using the jog key.

1 **Press the [FUNC1] key (down) and the [FUNC3] key (up) to adjust the table height.**

- Since the table height is determined at the same time as the origin, adjust the table height in advance.

2 **In local mode, press ▲ ▼ ◀ ▶.**

- The system will enter origin-setting mode.
- A red light pointer with the marking "●" will appear on the table or on the media.

3 **Press ▲▼◀▶ to move the light pointer marking.**

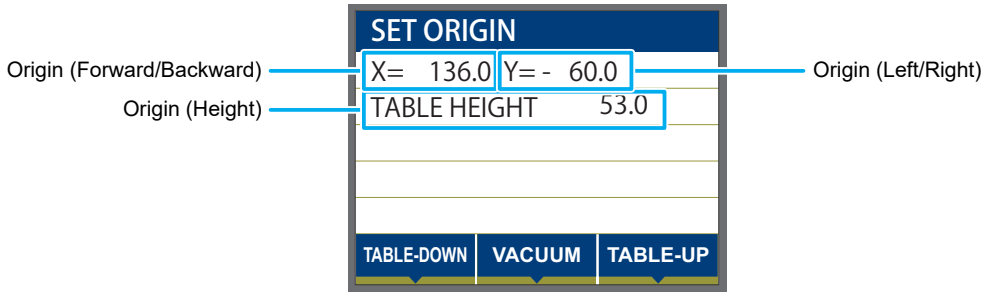

- Move the light pointer to the location where you want to set the new origin.

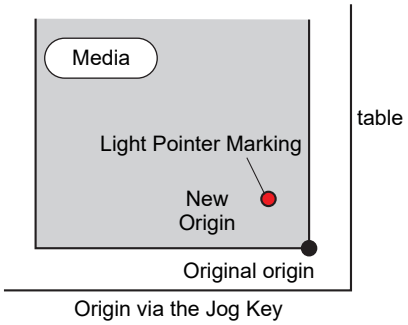

4 **Once you have determined the print origin, press the [ENTER] key.**

- The origin is updated.

Important! The origin set using the jog key is cleared when the power is turned off.
The table height is not cleared even when the power is turned off.

Loading the Media

Align the media with the L-shaped marking (print origin) at the far right of the table.

To change the print origin, please refer to ☞ "Changing the origin"(P. 54).
When using a jig, use the tap (8.0 mm deep) located at the edge of the table.

To make it easier to load media, you can lower the table and load it by following the steps below.

1 **In local mode, press [FUNC1] (MENU).**

2 **Press ▲▼ and select "Workset."**

3 **Press the [ENTER] key.**

- The table will lower.

4 **Align the media with the L-shaped marking (print origin) at the far right of the table.**

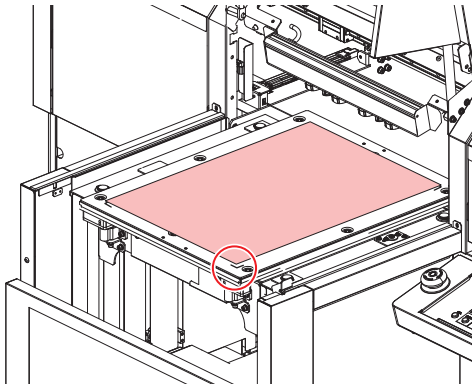

5 **Press the [ENTER] key.**

- The table rises to the height used for printing.

About Switching the Suction Fan

The suction function that secures the media during printing activates automatically (when using the suction table).

You can configure the operation of the adsorption function. For more details, seeSetting of FAN MODE.

If the setting is set to “Manual” in “Fan Mode” in the settings menu, press the [SEL] key, then press the [FUNC1] (VACCUM) key to turn the suction fan on or off.

2.3 Test Printing

Perform test printing in the specified direction to check for print defects (such as blurs or missing areas) caused by nozzle clogging or other issues.

If you are using white or clear ink, please print on a transparent film to check the results.

Please check the following before starting test printing
• Is the media set? (☞ "Loading the Media"(P. 53))
• Is the origin set? (☞ "Changing the origin"(P. 54))
• Is the table height appropriate? (☞ "Head Height Menu"(P. 62))

1 **On the local screen, press [FUNC2], select [test printing], and press the [ENTER] key.**

- The Test Print menu is displayed.

2 **Press ▲▼to select the print orientation, then press the [ENTER] key.**

- If nozzle recovery is not configured, test printing will begin in the specified direction.
  SCAN Direction: Align with the media's scan (width) direction
  FEED Direction: Align with the media's feed (rear) direction

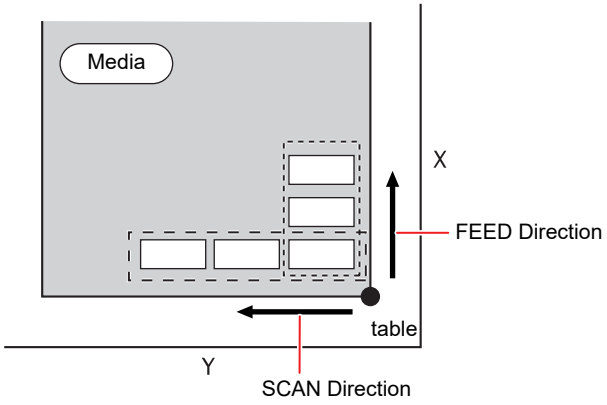

FEED ReportTest printingFEED DirectionTest Printing

- If nozzle recovery is enabled, press ▲▼to set it to ON or OFF, and then press the [ENTER] key.
  ON: Prints with nozzle recovery set to “ON.”
  OFF: Prints with nozzle recovery set to “OFF.”

Important! If the head temperature is not at a certain level, a message will appear. In this case, you cannot print. Once the message disappears, you can print.

3 **Check the print results.**

- If everything is normal, please print the data.
  ☞ "Starting Printing"(P. 59)
- If a problem occurs, please execute a head cleaning.

Normal Pattern	Abnormal Patterns		
-	Dropouts	Nozzle Disengagement	Nozzle Deflection
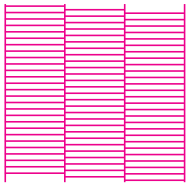	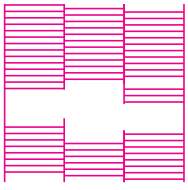	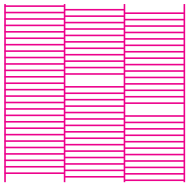	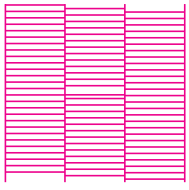

Normal Pattern	Abnormal Patterns		
-	There are a lot of missing lines.	There are gaps in the line here and there.	The line spacing is too tight or the lines are overlapping.

Perform test printing using the white calibration test pattern

Printing a background on the white ink areas within the pattern makes it easier to verify.

1 **In local mode, press [FUNC2] (TEST PRINT/CLEANING), then press the [ENTER] key.**

- The Test Print menu is displayed.

2 **Press ▲ ▼ and select “Check Features.”**

3 **Press the [ENTER] key.**

- Thetest pattern will be printed in the following order.

  (1) A solid black printed pattern is displayed.

  (2) The media automatically rewinds, and a test pattern is printed.

4 **Check the print results.**

- If everything is normal, exit the operation.
- If a problem occurs, execute a head cleaning.

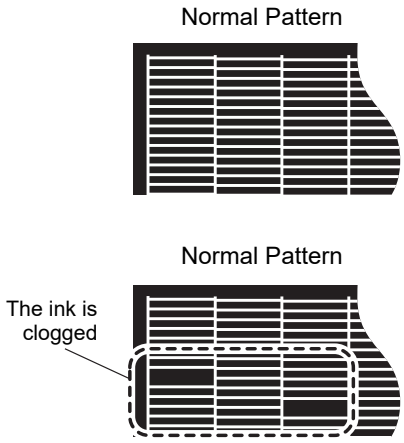

2.4 Print Data

Starting Printing

Important! If the head temperature has not stabilized, a message will appear. In this case, you cannot print. Once the message disappears, you can print.

You can still send data even if an error message appears. Printing will begin after the display disappears.

1 Position the media.

- Please refer to☞ "Loading the Media"(P. 53).
- If the fan mode setting is set to “Manual,” press the [SEL] key and then the [FUNC1] (VACUUM) key as needed to draw the media in.

2 In local mode, press [FUNC3] (REMOTE).

- The system will switch to REMOTE mode, allowing it to receive data from the computer.
- The table height (including the vacuum table and table spacers) is displayed.

3 Send the data to be printed from the computer.

- The print conditions will be displayed.
- For information on how to send data, please refer to the Operation Manual for the software you are using.

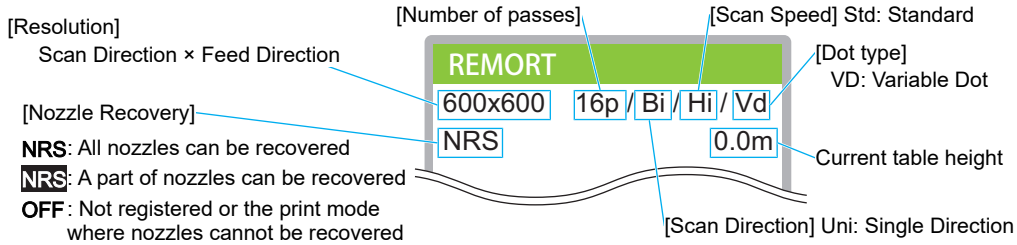

4 Start printing.

- The print origin does not change even after printing is complete.

5 After printing is complete, if the vacuum is set to “ON,” press [FUNC1] (VACUUM) to turn the vacuum “OFF” (when using the vacuum table).

6 Remove the media.

Important! During printing, the heat from the LED UV lamp may cause the media to lift, resulting in the print job being interrupted. Please reload the media and start printing.

Cancel Printing

If you cancel a print job midway, the printing process will stop, and any data already received will be deleted from the machine.

1 While printing, press [FUNC3] (LOCAL).

- The print job will be canceled.
- If you are sending data from a computer, stop the data transmission on the computer.

Pressing the [FUNC3] (REMOTE) key resumes printing from where it was interrupted.

2 **Press the [SEL] key once.**

- "DATA CLEAR" will appear at the bottom of the display.

3 **Press [FUNC3] (DATA CLEAR).**

4 **Press the [ENTER] key.**

- The received data will be deleted, and the system will return to local mode.
  The table will move to its designated location.

Confirming Whether Print Data Is Being Received or Has Been Received

If printing is interrupted or if print data is received while the printer is in local mode, the warning message “! Print Data Present” will appear on the display.

At this point, press [FUNC3] (REMOTE) to switch to remote mode, which will resume or start printing.

If “! Work High” is displayed,

If printing is interrupted and the warning message “! High Workload” appears on the display, follow these steps to resume printing.

Important! During printing, the media height sensor constantly monitors the media height. When the gap check function (☞ "Gap Check"(P. 63)) is set to "ON" and the mode is set to "Stop," if the sensor detects media, printing will automatically pause and "!Media Too High" will appear on the display.

1 **Press the [ENTER] key.**

- Return to local mode.

2 **Check the media settings, then press [FUNC3] (REMOTE).**

- Printing will resume.
- If you do not wish to resume printing, please refer to☞ "Cancel Printing"(P. 59)to stop printing.

If you open the cover while printing

If you open the cover while printing, a warning message saying “Please close the cover” will appear on the display.

1 **Close the cover and press the [ENTER] key to stop printing.**

- The initialization process will begin.

If you open the cover while the printer is not printing, the message “Please close the cover” will appear on the display. In this case, press the [ENTER] key.

Chapter 3 Setup



This chapter

This chapter describes the procedures to configure various settings for this machine.

Head Height Menu 62
Gap Check 63
Origin Setting Menu.....65
Setting the Z-axis origin 66
Changing the Origin Using the Jog Key..... 66
Media Selection Menu.....68
Media Setting Menu 69
Function Setting Menu 71
Auto-correction..... 73
Feed Correction Settings 73
Maintenance Menu.....75
Registering Nozzle Recovery.....77
Nozzle Check.....78
Environment Setting Menu 79
Network Settings.....81
Setting the Receive/Retrieval Position (MDL Command) 82
Machine Status Menu.....83

3.1 Head Height Menu

Set conditions such as media thickness and table height.

menu List

Function Name	Setting	Default value	Overview
Media thickness	0.0 to 250.0 mm	0.0 mm	Set the media thickness.
Head gap	1.5 to 4.0 mm	1.5 mm	Set the head gap.
Gap Check ☞ "Gap Check"(P. 63)	ON/OFF	ON	Specify the action to take when an obstacle is detected during printing.

Gap Check

Configure the behavior when an obstacle is detected during printing.

1 **In local mode, press [FUNC1] (MENU).**

2 **Press ▲▼ to select "Head Height."**

3 **Press the [ENTER] key.**

4 **Press ▲▼ to select "Gap Check," then press the [ENTER] key.**

5 **Press ▲▼ to set the mode.**

- Setting: ON, OFF
- When set to "ON,"
  , you can select the operation.
  Please choose from the following three options: Auto, Manual, or Stop.

Mode		Overview	Obstacle sensor		Action When the Sensor Is Triggered
			Before Printing	Printing	
ON	Auto	Before printing, check that the media height matches the specified table height (media thickness). In addition, if the obstacle sensor is triggered before or during printing, lower the table until the sensor no longer detects an obstacle, and then reset the "Table Height" setting. If the obstacle sensor triggers even when the table is lowered all the way, the machine will display "Workpiece Too High" and stop.	Valid	Valid	Pull the table out
	Manual	You can manually set the media height (gap setting). The system does not check the media height before or during printing.	Invalid	Invalid	N/A
	Stopped	Before printing, the machine checks the media height against the specified table height (media thickness); if the obstacle sensor is triggered, it displays "Workpiece Too High" and stops.	Valid	Valid	Stop (Do not lower the table)
OFF		The printer will print without checking the media height.	Invalid	Invalid	N/A

In "ON" – "Manual" mode or "OFF" mode, there is a risk of the media and the head colliding. Be sure to visually check the media height before printing.

6 **Press the [ENTER] key.**

7 **To turn off the device, press the [END/POWER] key several times.**



The gap-check feature is not designed to detect obstacles and completely prevent collisions with the head.
In addition, detection accuracy may be compromised depending on the shape and material of the media.
Even when the gap check is set to “ON,” please visually check the media height before printing.

3.2 Origin Setting Menu

Set the X, Y, and Z origins for printing online prints or internal patterns.

menu List

Function Name	Setting	Initial value	Overview
X Offset (REM)	0.0 mm to 420.0 mm	0.0 mm	Set the X-axis origin (offset value) for online printing.
Y Offset (REM)	0.0 mm to 300.0 mm (UJF200-3042) 0.0 mm to 610.0 mm (UJF200-6042)	0.0 mm	Set the Y-axis origin (offset value) for online printing.
X Offset (LOC)	0.0 mm to 420.0 mm	0.0 mm	Set the X-axis origin (offset value) for internal patterns, such as test printing.
Y Offset (LOC)	0.0 mm to 300.0 mm (UJF200-3042) 0.0 mm to 610.0 mm (UJF200-6042)	0.0 mm	Set the Y-axis origin (offset value) for internal patterns, such as test printing.
Z-Origin ☞ "Setting the Z-axis origin"(P. 66)	1.5 mm to 251.5 mm	1.5 mm	Set the Z-origin (table height).

Setting the Z-axis origin

1 **In local mode, press [FUNC1] (MENU).**

2 **Press ▲▼ and select "Set Origin."**

3 **Press the [ENTER] key.**

4 **Press ▲▼ to select "Z origin," then press the [ENTER] key.**

5 **Press ▲▼ to set the Z-axis origin.**

- Setting Range: 1.5 mm to 251.5 mm

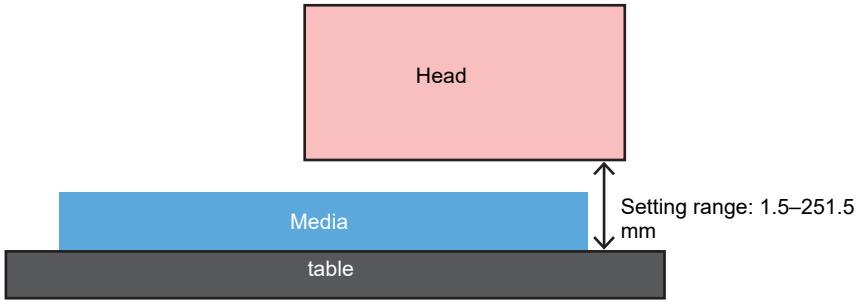

6 **Press the [ENTER] key.**

7 **To turn off the device, press the [END/POWER] key several times.**

Changing the Origin Using the Jog Key

Here's how to change the origin using the jog keys.

1 **Press [TABLE-UP] or [TABLE-DOWN] to adjust the table height.**

- Since the table height is determined at the same time as the origin, adjust the table height in advance.

2 **In local mode, press ▲▼◀▶.**

- The system will enter origin-setting mode.
- A red light pointer marking appears on the table or on the media.

3 **Press ▲▼◀▶ to move the light pointer marking.**

- Move the light pointer to the location where you want to set the new origin.

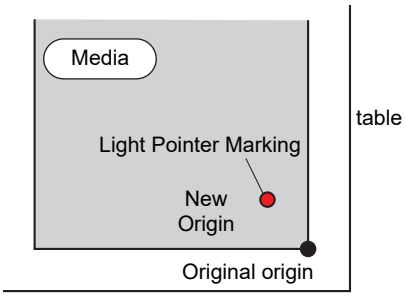

Origin via the Jog Key

4 **Press the [ENTER] key to set the print origin.**

- The origin and table height will be changed.

Important! The origin set using the jog key is cleared when the power is turned off.
The table height is retained even after the power is turned off.

3.3 Media Selection Menu

You can save media settings individually.

menu List

Function Name	Setting	Initial value	Overview
Media selection	Media 1/ Unregistered	Media 1	You can save individual settings for items 1 through 60.



- You can optionally register up to 59 entries under [Unregistered]. If you select [Not Registered], simply enter the media name to complete the registration.

3.4 Media Setting Menu

Set conditions such as the number of coats and the refresh level based on the type of media you are using.

Menu List

Function Name		Setting	Initial value	Overview
Media Information		-	-	Enter the media information.
	Media thickness	0.0–250.0 mm	0.0 mm	Enter the thickness of the media.
	Head gap	1.5–4.0 mm	1.5 mm	Enter the head gap.
Setting the Origin		-	-	Sets the print origin.
	X Offset (REM)	0.0 mm to 420.0 mm	0.0 mm	Set the X-axis origin (offset value) for online printing.
	Y Offset (REM)	0.0 mm to 300.0 mm (UJF200-3042) 0.0 mm to 610.0 mm (UJF200-6042)	0.0 mm	Set the Y-axis origin (offset value) for online printing.
	X Offset (LOC)	0.0 mm to 420.0 mm	0.0 mm	Set the X-axis origin (offset value) for internal patterns, such as test printing.
	X Offset (LOC)	0.0 mm to 420.0 mm	0.0 mm	Set the X-axis origin (offset value) for internal patterns, such as test printing.
	Z Origin☞ "Setting the Z-axis origin"(P. 66)	1.5 mm to 251.5 mm	1.5 mm	Set the Z origin (table height).
UV mode		ON / OFF / No Print	ON	Specify the UV exposure settings during printing.
UV AdjVal		-50 to +50 %	0 %	You can adjust the brightness of the pre-set UV-LED light. Check the performance (e.g. stickiness and odor) after printing. • Minus direction: Reduces hardness. • Plus direction: Increases hardness.
Work Change		ON/OFF	OFF	• OFF: After drawing online, the remote status is maintained (if the next drawing data is received, it will be overwritten). • ON: After drawing online, return to the local environment.
Vacuum Fan		AUTO/MANUAL	AUTO	• AUTO: When you want to automatically turn on the vacuum function before drawing • MANURAL: When you want to turn the vacuum on or off depending on the media you're using
MAPS*		-	-	MAPS: Mimaki Advanced Pass System—A feature that spreads out the boundaries between passes to make the banding streaks between them less noticeable. Altering MAPS may alter the color. This function may be less effective with certain types of images. * The MAPS version will vary according to the model.

Function Name			Setting	Initial value	Overview
	MAPS*		AUTO/OFF	AUTO	This should normally be set to "AUTO". When set to "MANUAL", the following items are displayed:
		Speed	50 to 100 %	100 %	Reducing speed will make streaks less visible. However, printing will be slower.
		Smoothing Level (Color)	0 to 100 %	-	Increasing smoothing makes streaks less visible. Make separate settings for color and spot color (white).
		Smoothing Level (Spot)			
Ionizer			ON/OFF	OFF	Set this when using the ionizer (optional). "Ionizer" (p. ***) Prints while removing static electricity from the media. The electrode probes are not on unless the machine is printing.
Media Name Change			-	-	You can change the name of a setting type. The name can include alphanumeric characters or symbols.
Media Setting Reset			-	-	Resets the settings for the currently selected media.
Delete MediaInfo			-	-	Select the media and delete it. If you delete the currently selected media, you will be prompted to select media again.

3.5 Function Setting Menu

Set conditions such as the number of coats and refresh level based on the media being used.

Menu List

Function Name	Setting	Initial value	Overview
Feed Comp. ☞ "Feed Correction Settings"(P. 73)	-9999 to 0 to 9999	0	Print a printed pattern to calibrate the media feed, and then perform the calibration.
Auto-correction			The automatic correction function (DAS2: Dot Adjustment System 2) uses a sensor to detect the correction pattern and automatically adjusts the dot's drop position. ☞ "Auto-correction"(P. 73) • Check to confirm that the media does not lift up. • Load white and clean media. • Media such as synthetic paper, tarpaulin, or cloth media may not be detected. • Do not send RIP data from the PC during pattern printing. • If automatic correction is unsuccessful, correct the position manually. [MENU] > [Function Settings] > [feed correction]
Logical Seek	Host / ON / OFF	Host	Set the scan range while printing. Head Movement When Logical Seek Is "OFF" 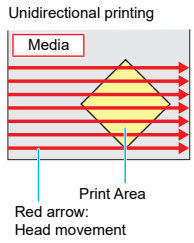 Head Movement When Logical Seek Is "ON" 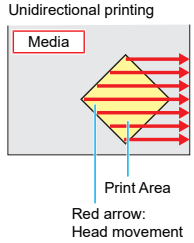
Power Setting	-	-	Set the times for the power to turn on and off automatically.
Auto Power-off	5 to 60	5	Sets the time until the power is automatically turned off.
Auto Power-on	-	-	Sets the time to automatically turn on the power.
Setup	ON/OFF	ON	Sets whether to turn on or off the power.

Function Name				Setting	Initial value	Overview
		Time		12:00 a.m. – 11:59 p.m.	0:00	Sets the time to turn on the power.
		Day		Monday to Sunday	Day	Sets whether to turn on or off the power on each day of the week.
		Nozzle Check		ON/OFF	ON	Automatically executes the nozzle check function when the machine is started with auto power-on. Performs nozzle recovery (cleaning followed by nozzle checking) if "nozzle clogging" is detected.
			Cleaning	Soft / Normal / Hard	Soft	Sets the cleaning type.
			Retry Count	0 to 3 times	0	Performs nozzle recovery (cleaning followed by nozzle checking) for the specified number of times.

Auto-correction

The automatic correction function (DAS2: Dot Adjustment System 2) automatically performs feed correction and dot position correction.

1 **Position the media.**

- Please refer to☞ "Loading the Media"(P. 53).

2 **In local mode, press [FUNC1] (MENU).**

3 **Press ▲ ▼ and select “Function Settings.”**

4 **Select “Auto-Correction” and press the [ENTER] key.**

5 **Select whether the background is to be printed, then press the [ENTER] key.**

- This screen appears only when an ink set that includes white ink is selected.
- Applicable ink sets: LUS-210: 4C+W, 4C+ClW; ELS-170: 4C+ClW

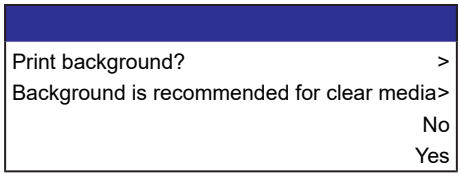

6 **Press the [ENTER] key.**

- We will begin the adjustments.



Adjustment Items
• Feed Comp.

- Check to confirm that the media does not lift up.
- Load clean media.
- Synthetic paper, tarpaulin, and fabric-based media may not be corrected properly.
- With ink sets that do not include white ink, it is not possible to create a background layer, so corrections may not work properly on colored or transparent media.
- Do not send RIP data from the PC during pattern printing.
- If automatic correction fails, or if the adjustment is still off even after performing automatic correction, please perform the following steps manually.
  [Function Settings] > [Feed Correction]☞ "Feed Correction Settings"(P. 73)

Feed Correction Settings

Draw the correction pattern and adjust the feed rate.

In the alteration pattern, you will draw two strips. Please adjust the two bands so that the boundary between them is of uniform darkness.

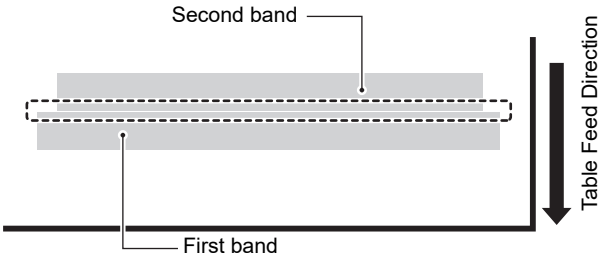

1 **Position the media.**

- Please refer to☞ "Loading the Media"(P. 53).

2 **In local mode, press [FUNC1] (MENU).**

3 **Press ▲▼and select “Function Settings.”**

4 **Press the [ENTER] key.**

5 **Press ▲▼to select “feed correction,” then press the [ENTER] key.**

6 **Press the [ENTER] key to draw the correction pattern.**

7 **Check the correction pattern and enter the correction values.**

- Setting range: -9999 to 0 to 9999
- If you enter a “+” in the field:
  the two bands will move in the direction that widens the gap between them.
- If you enter something in the “ - ” field, :
  the two bands will move closer together.
- For every “1” change in the correction value, the band shifts by approximately 0.83 µm.

8 **Press the [ENTER] key.**

- I'll redraw the adjustment pattern and check it again.
- If calibration is necessary, follow the steps in Step 7 to calibrate the device.

9 **To turn off the device, press the [END/POWER] key several times.**

3.6 Maintenance Menu

These are the various settings for maintaining the machine.
The following items can be configured in the maintenance settings.

Menu List

Function Name	Setting	Initial value	Overview
Station Maint.	-	-	We will perform maintenance on the carriages and the surrounding station area.
Carriage Out	-	-	Move the carriage and clean the area around the cap, the head, the wiper, and other parts.
Left side of the station	-	-	Clean the area around the gas station, including the cap and windshield wipers.☞ "Cap Rubber Cleaning"(P. 92)☞ "Cloth Wiper Replacement"(P. 100)
Move To Maint. Space	-	-	Cleans around the print head.
Nozzle Wash	1 to 99 min		Soak the nozzle surface in a maintenance cleaning solution to correct issues such as nozzle misalignment or nozzle deflection. ☞ "Cap Rubber Cleaning"(P. 92)
Pump Tube Cleaning	-	-	Clean the ink passages. ☞ "Cleaning the Ink Discharge Channels"(P. 93)
Custody Wash	1 to 99 min		Perform this procedure when the machine will not be used for an extended period of time. Do nozzle washing and flow path cleaning in advance to keep the machine in good working order. ☞ "If the product will not be used for an extended period of time"(P. 95)
Windshield Wiper Replacement	-	-	Use this when replacing the cloth wiper. When you replace the cloth wiper, the total length of used cloth wiper tracked by the machine will be reset. ☞ "Cloth Wiper Replacement"(P. 100)
Cap Replacement	-	-	Use this function when replacing the cap. Replacing the cap resets the cap usage time stored in the machine. ☞ "Cloth Wiper Replacement"(P. 100)
Nozzle Recovery	-	-	This feature allows the printer to continue printing using other nozzles if some nozzles fail to recover.
Print	-	-	Print a printed pattern to identify which nozzles are experiencing nozzle clogging.
Entry	-	-	Register the malfunctioning nozzles identified during the “Drafting” step.
Reset	-	-	Resets the registered malfunctioning nozzles.
Test Printing	ON/OFF	OFF	Sets whether to perform nozzle recovery before test printing.
Nozzle Check	-	-	☞ "Nozzle Check"(P. 78)

Function Name	Setting	Initial value	Overview
Printing Check	ON/OFF	OFF	Performs nozzle clogging detection before printing starts.
Check Interval	-	-	Sets the nozzle clogging detection timing.
Length	0.1 to 100.0 m	30.0 m	Performs nozzle clogging detection after the length set is reached and before the next print starts.
File	1 to 1,000 files	30 files	Performs nozzle clogging detection after the preset number of files has been printed and before the next print starts.
Continuation Print	Stop / Continue	Stopped	Select whether to stop or continue printing if "Nozzle clogging" is detected.
Action	OFF / 1–100	10	Performs nozzle recovery (cleaning followed by nozzle checking) if "nozzle clogging" is detected.
Cleaning	Soft / Normal / Hard	Soft	Sets the cleaning type.
Retry Count	0 to 3 times	0	Performs nozzle recovery (cleaning followed by nozzle checking) for the specified number of times.
Auto Nozzle Recovery	ON/OFF	OFF	Performs nozzle recovery automatically if "nozzle clogging" is detected. See below if you wish to perform nozzle recovery manually. ☞ "Registering Nozzle Recovery"(P. 77)
Judgment Condition	OFF / 1–64 nozzles	1	Set the number of nozzles to be detected as clogged before "nozzle clogging" is detected. Up to 16 nozzles per row can be set. The next print will not start if "nozzle clogging" is detected during continuous printing.
Auto Maint.	-	-	It automatically performs various maintenance functions. Please set the interval at which each maintenance execution is executed.
Refresh	4h	-	Set the interval for the refresh operation.
Cleaning Interval	24h	-	Set the interval for head cleaning.
Type	Normal/ Soft/Hard	Soft	Sets the cleaning type for head cleaning.
Print Maint.	-	-	Sets the maintenance to be performed automatically midway during printing.
White Maintenance	-	-	Prevents ink sedimentation inside the ink routes. • Use this when uneven color occurs for the white ink.
Waste Ink Tank	-	-	Reset or correct the usage count for the waste ink tank. ☞ "Maintenance of the Waste Ink Tank"(P. 104)
Air PG	-	-	Expels any air in the ink paths. • Execute this procedure when a large amount of white ink has caused nozzle clogging (resulting in dropouts).

Registering Nozzle Recovery

Allows other nozzles to be used for printing if maintenance actions like nozzle washing fail to resolve ejection failures (e.g., nozzle clogging or deflection).

- Nozzle recovery can be specified for up to 10 nozzles per row. The time taken for printing remains unchanged even when nozzle recovery is set.

- Please load media that is at least 280 mm tall and 300 mm wide. If you load media that is smaller than this size, the print job may be interrupted.

1 **Position the media.**

2 **On the LOCAL mode screen, select [MENU] > [Maintenance], then press the [ENTER] key.**

- The Maintenance menu is displayed.

3 **Select [Nozzle Recovery] > [Print], then press the [ENTER] key.**

- Print a nozzle recovery pattern.
- The Select Entry Nozzle screen appears once printing is complete.

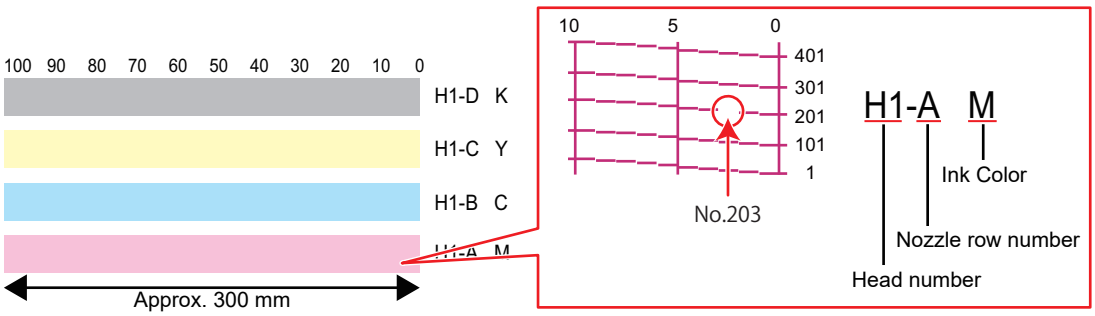

4 **Select the "head number and nozzle row" for nozzle recovery, then press the [ENTER] key.**

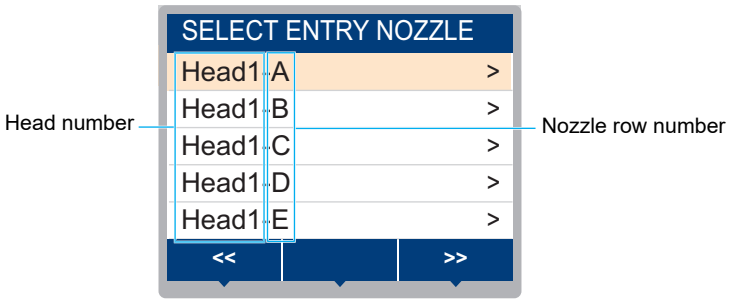

5 **Enter the "nozzle number" for nozzle recovery, then press the [ENTER] key.**

- Select the entry number before entering the nozzle number.
- Nozzle recovery is set.

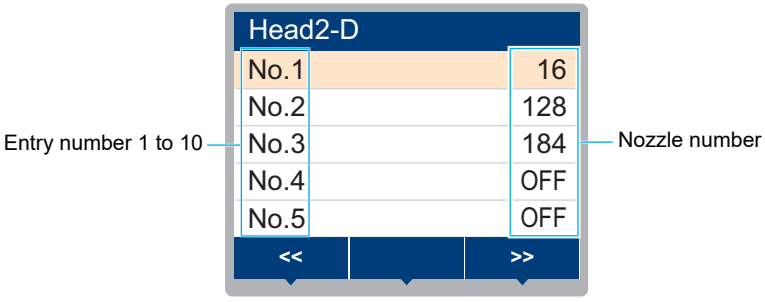

6 **Press the [ENTER] key once entry is complete.**

- Select [Maintenance] > [Nozzle Recovery] > [Test Print], then select "ON" to perform nozzle recovery and test printing. Test Printing

Nozzle Check

This is used to check for nozzle clogging before printing starts. Sets whether to perform maintenance functions automatically if nozzle clogging is detected.

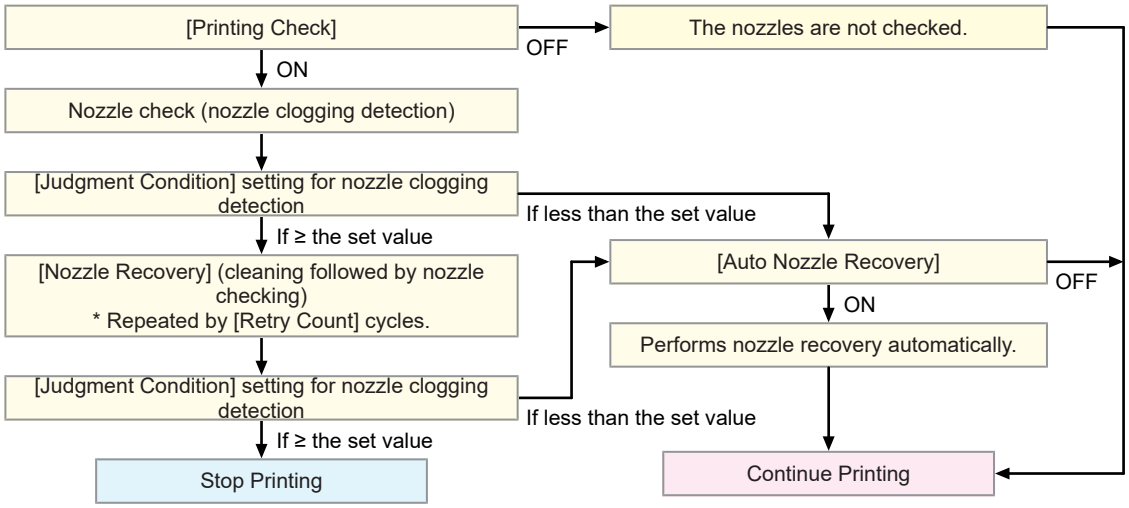

3.7 Environment Setting Menu

Configure the basic settings required to use the machine, such as the time, language, and network settings.

Menu List

Function Name	Setting	Initial value	Overview
LANGUAGE	English / 日本語 / Deutsch / Português / Español/ Italiano / Korean	English	Sets the display language.
Time Set	+4h to -20h	0	Sets the current time and date. (With respect to JST) • This can be set within the range of -20 to +4 hours.
Key Buzzer	ON/OFF	ON	Sets an audible tone when keys are pressed. • Audible signals indicating errors, warnings, and operation end cannot be muted, even if "OFF" is selected for this setting.
Print Complete Buzzer	OFF/Pattern 1/ Pattern 2	OFF	You can set a buzzer to sound when printing is complete.
Unit Setting	-	-	Set the display units.
Temp.	°C / °F	°C	Sets the display unit for temperature (Celsius/ Fahrenheit).
Length	mm/inch	mm	Sets the display units for length and area. • Some items are displayed in "mm" even if "inch" is selected.
Network ☞ "Network Settings"(P. 81)	-	-	Configure the network settings.
Check IP Address	-	-	The IP address currently in use by the machine is displayed.
Checking the MAC Address	-	-	The MAC address currently in use by the machine is displayed.
DHCP	ON/OFF	OFF	If this option is enabled, the system will use the IP address assigned by the DHCP server.
AutoIP	ON/OFF	OFF	When enabled, the AutoIP protocol determines the IP address to use. However, if DHCP is set to “ON,” DHCP takes precedence.
Remote Control	-	-	To use the remote control feature, you will need the MRA (Mimaki Remote Access) application. MRA is a remote access tool installed on a computer or smartphone that allows viewing of product information and panel operation from a remote location away from the machine (within the same network segment).
Setup	Enabled / Disabled	Valid	Enable/disable remote control.

Function Name		Setting	Initial value	Overview
	PIN code	0000 to 9999	0000	Enter the same PIN code as MRA. The PIN code is used for authentication between the machine and MRA.
	KeyLife	5 to 120 min	30	Sets the time interval before disconnecting the machine and MRA if no operations are performed using MRA.
Optional Jig Set		-	-	The system will detect the optional jig.
Set Receiving/Pickup Locations		-	-	Set the table position for receiving and retrieving workpieces when controlling the printer using the "MDL command."
	Intake Stage	Front/Rear	Front	This setting specifies the front and rear positions of the table when receiving a workpiece while performing position control of the printer using the MDL command.
	Acceptable Height	Lowest Point / Highest Point / When Printing		This setting specifies the table height when receiving a workpiece while controlling the printer using the MDL command.
	Collection Stage	Front/Rear Front	Front	When using the MDL command to control the printer, set the front and rear positions of the table for retrieving the workpiece.
	Recovery Height	Lowest Point / Highest Point / When Printing		This setting specifies the table height for retrieving the workpiece when controlling the printer using the MDL command.
Machine Reset		-	-	Initializes the details set.

Network Settings

You can also configure network settings using “Network Configurator,” a tool designed for configuring network settings on Mimaki products.

To download Network Configurator, go to the Mimaki Engineering download page (https://mimaki.com/download/) and check the “Drivers/Utilities” checkbox.

1 **In local mode, press [FUNC1] (MENU).**

2 **Press [FUNC3] (>>).**

3 **Press ▲ ▼ and select “machine setting.”**

4 **Press the [ENTER] key.**

5 **Press ▲ ▼, select “Network,” and press the [ENTER] key.**

6 **Press ▲ ▼, select “Check IP Address,” and press the [ENTER] key.**

- The IP address currently in use on the machine is displayed.
  After connecting to the network, it may take some time for the IP address to be assigned. If the IP address is unknown, it will display "0.0.0.0."IP addressIp Address
- Once you have finished verifying, press the [ENTER] key.

7 **Press ▲ ▼, select “Check MAC Address,” and press the [ENTER] key.**

- The MAC address currently in use on the machine is displayed.MAC AddressMAC Address
- Once you have finished checking, press the [ENTER] key.

8 **Press ▲ ▼ to select “DHCP,” then press the [ENTER] key.**

9 **Press ▲ ▼ to select a setting.**

- Setting: ON / OFF
- If set to “ON,” the system uses the IP address assigned by the DHCP server.

10 **Press the [ENTER] key.**

11 **Press ▲ ▼, select “AutoIP,” and press the [ENTER] key.**

12 **Press ▲ ▼ to select a setting.**

- Setting: ON / OFF
- If set to “ON,” the AutoIP protocol determines the IP address to be used. However, if DHCP is set to “ON,” DHCP takes precedence.

13 **Press the [ENTER] key.**

14 **Press ▲ ▼ to select “IP Address,” then press the [ENTER] key.**

15 **Press ▲ ▼ to enter the IP address.**

- If both DHCP and AutoIP are set to “OFF,” you can configure the IP address. Otherwise, proceed to Step 16.

16 **Press the [ENTER] key.**

17 **To turn off the device, press the [END/POWER] key several times.**

18 **Turn off the power, then turn it back on.**

- The network settings will take effect when you turn the machine off and on.

Setting the Receive/Retrieval Position (MDL Command)

Set the table position for accepting and retrieving workpieces when controlling the printer using the "MDL command."

Important!
- The settings in this menu are valid only when controlling the printer using "MDL commands."

What Is the "MDL Command"?
- These are commands that allow users to control our printers using their production systems and peripheral devices.
  This allows you to perform position control over the table on which the workpiece is placed, as well as printer operations such as starting a print job.
  You can also retrieve information such as the printer's ink levels and error messages. By using the technical information (SDK) we provide to develop software that utilizes the “MDL command,” you can build a system that is best suited to your needs.

We are distributing the information necessary for operating "MDL Commands" as "Technical Information (SDK)" on the dedicated website below. You must register as a user (free) to download https://japan.mimaki.com/download/sdk/SDK.

3.8 Machine Status Menu

This is used to check machine information.

● menu List

Function Name		Overview
Usage	Roll Wiper Remain	Displays the remaining amount of cloth wiper. • To reset the remaining amount of cloth wiper, press the [FUNC2] key while the amount is displayed.
	Waste Ink Tank	Displays the approximate level of waste ink in the waste ink tank as a percentage. • To reset waste ink levels, press the [FUNC1] key while the level is displayed.
	Print Length	Displays the total length printed.
	Print Area	Displays the total area printed.
	Use Time	Displays the total time the power has been turned on.
Error History		Displays the error and warning history. • These are listed in chronological order. Use the keys to cycle through occurrence time/date and error/warning information.
Maintenance History	Maintenance	Displays a record of maintenance function execution (up to 10). • Cleaning P. ××, Cleaning Wipes P. ××, Pump Tube Cleaning P. ××, Nozzle Washing P. ××, Circulation
	Replace Wiper	The replacement history for the cloth wiper will be displayed (up to 5 entries).☞ "Cloth Wiper Replacement"(P. 100) • Slot 1 to 8
	Ink replacement	The replacement history for the ink packs in each ink slot is displayed (up to 5 entries).
	Cap Replacement	The cap replacement history will be displayed (up to 5 entries).
Version		Displays the machine firmware and other versions.
List		This is used to print machine information.

Chapter 4 Maintenance



This chapter

This chapter explains the necessary items for comfortable use of this machine, such as methods of daily maintenance and ink cartridge maintenance.

Maintenance Precautions 86

Maintenance Methods 87
- Maintenance Items and Timing 87
- Ink Maintenance 88
- Maintenance in the Head Area 89
- Cloth Wiper Area Cleaning 90
- Cleaning the Mist Filter 91
- Cap Rubber Cleaning 92
- Cleaning the Ink Discharge Channels 93
- Cleaning the Table 95
- Exterior Cleaning 95
- If the product will not be used for an extended period of time 95
- NCU Cleaning 97
- DAS (Automatic Correction Function) Sensor Cleaning 98

Replacement of Consumable Item 100
- Cloth Wiper Replacement 100
- Mist Filter Replacement 103
- Maintenance of the Waste Ink Tank 104
- Cap Replacement 106
- Replacing the Deodorizer Filter 108

4.1 Maintenance Precautions

- This machine includes parts that must be replaced periodically. We therefore recommend taking out a maintenance contract. Carry out maintenance periodically and replace consumable items to prevent quality defects and accidents.

⚠ WARNING

- Clean periodically. Debris and dust will accumulate on electrical components when the machine is used for extended periods. There is a risk of failure, electric shock, or fire due to current leakage.
- Do not clean by blowing—e.g., avoid using air blowers. Doing so may lead to failure, electric shock, or fire involving the machine if airborne debris or dust gets inside electrical components. Wipe using a soft cloth soaked in diluted neutral detergent and thoroughly wrung out. A vacuum cleaner may also be used for cleaning.

- Be careful to prevent liquids from getting inside the machine. Otherwise there is a risk of failure, electric shock, or fire.

⚠ CAUTION

- The UV-LED unit becomes extremely hot. Be careful not to touch the LED after it has been turned off until it has sufficiently cooled.

- For heavy soiling, wipe using a soft cloth soaked in diluted neutral detergent and thoroughly wrung out.

- Pay close attention to ventilation and be sure to wear safety glasses, gloves, and a mask when handling ink, maintenance liquid, waste ink, or other solutions used with the machine. Leaking ink may adhere to the skin or get into the eyes or mouth.

NOTICE

- Never touch the print head nozzle surface. Do not allow water or alcohol to come into contact with the print nozzle surface. This will increase the risk of machine failure or ejection failures (e.g., nozzle clogging or deflection).
- Do not use cotton swabs to clean around the head or carriage. Fibers from cotton swabs may adhere to the head nozzle surface and lead to ejection failures (e.g., nozzle clogging or deflection).
- Do not splash ink or maintenance liquid on the covers. Exposure to splashing ink or maintenance liquid may damage or deform the cover.
- Do not use benzine, thinner, or any chemical agent containing abrasives. Use of these chemicals may result in damage to or deformation of parts.
- Do not use organic solvents such as acetone and IPA. Doing so may damage the machine.
- Do not move the carriage by hand. To move the carriage, use the carriage out function on the menu.

4.2 Maintenance Methods

To ensure the machine remains accurate and lasts for many years, please clean it regularly or as needed, depending on how often you use it.

Maintenance Items and Timing

Timing	Item
Periodically	Shake the ink. ☞ "Ink Maintenance"(P. 88)
At the start of the week's work	Maintain the white ink. ☞ "White ink maintenance"(P. 88)
At the end of the week's work	Clean the cap rubber. ☞ "Cap Rubber Cleaning"(P. 92)
	Clean the underside of the carriage. ☞ "Maintenance in the Head Area"(P. 89)
	Clean the underside of the UV-LED unit. ☞ "Maintenance in the Head Area"(P. 89)
	Check the waste ink levels in the waste ink tank. ☞ "Waste Ink Confirmation Message"(P. 104)
Every month	Clean around the wiper. ☞ "Cloth Wiper Area Cleaning"(P. 90)
	Clean the NCU.
	Clean the ink discharge channel. ☞ "Cleaning the Ink Discharge Channels"(P. 93)
	Please clean the table.☞ "Cleaning the Table"(P. 95)
	Clean the cover (exterior). ☞ "Exterior Cleaning"(P. 95)
	Clean the mist filter. Press down with a paper towel or similar material to absorb the ink.☞ "Cleaning the Mist Filter"(P. 91)
When not used for more than a week	Clean the cap and wash the ink discharge channels. After cleaning, store without turning off the main power supply. ☞ "If the product will not be used for an extended period of time"(P. 95)

Items Required for Maintenance

To order replacement consumable items, contact your local dealer or our service office. For more information on consumable items, refer to our website (https://mimaki.com/supply/inkjet.html).



- Do not store consumable items in locations where children may enter.

Ink Maintenance

If ink constituents are sedimented, the ink density may become uneven. We recommend shaking the ink periodically to keep printing consistent.

UV ink: once a month.

White ink: once a day.

1 Shake the ink bottle to the left and right slowly at least 20 times.

- Tighten the ink bottle lid securely, then shake the bottle slowly from left to right to ensure that the ink moves inside, holding the ink bottle lid with a piece of recommended non-woven fabric.

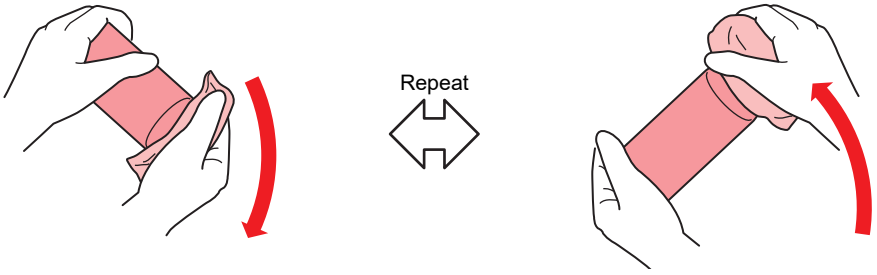

- Shake slowly. If the bottle is shaken too violently, ink may leak out or the air mixed in the ink may cause nozzle clogging.
- If the ink bottle is partially used, tilt it slowly until the ink bottle is upright.

White ink maintenance

White ink constituents are more easily sedimented than other ink colors. If ink constituents are sedimented, the ink density may become uneven. Perform maintenance once a week as follows before using the machine.

1 Shake the ink bottle of white ink.

- ☞ "Ink Maintenance"(P. 88)

2 On the LOCAL mode screen, select [MENU] > [Maintenance], then press the [ENTER] key.

- The Maintenance menu is displayed.

3 Select [White Maintenance], then press the [ENTER] key.

4 Press the [ENTER] key.

- Discharging/filling/cleaning starts automatically.
- The elapsed time is displayed.

Maintenance in the Head Area

Since the head itself incorporates an extremely delicate mechanism, you must exercise great care when cleaning it. Gel-like ink or dust may accumulate on the bottom of the slider and in the area around the head, so please use a cleaning swab or similar tool to wipe it off. When doing so, be sure not to rub the head nozzle under any circumstances.

Cleaning Supplies	
UJ Cleaning Swab (SPC-0386)	Gloves
Safety glasses	Maintenance Cleaning Solution

When cleaning, be sure to wear the included safety glasses and gloves. Ink may get into your eyes.
The ink contains organic solvents. If it comes into contact with your skin or eyes, rinse immediately with plenty of water.

1 **On the LOCAL mode screen, select [MENU] > [Maintenance], then press the [ENTER] key.**

- The Maintenance menu is displayed.

2 **Select [Station Maint.] > [Carriage Out] > [Move To Maint. Space], then press the [ENTER] key.**

- The carriage moves to the left edge of the machine.

3 **Open the maintenance cover.**

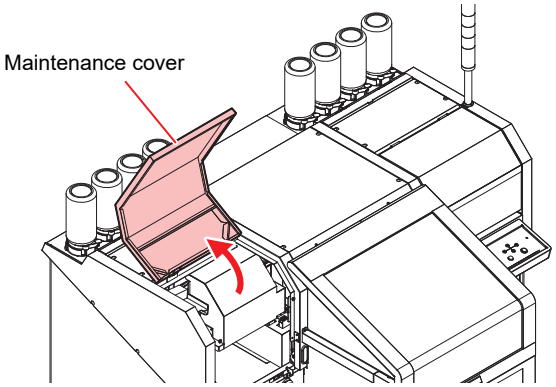

4 **Clean the UV-LED lamp glass surface.**

- Wipe off any adhering ink using a cleaning stick moistened with maintenance liquid. Wipe off the maintenance liquid. Make sure none remains.

Please do not scrub the glass too hard. There is a risk of damage.

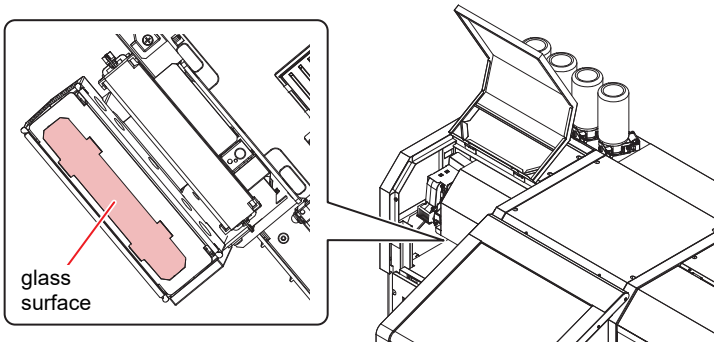

5 **Clean the sides of the head, etc.**

- Use a cleaning swab moistened with maintenance cleaning solution to wipe off any ink that has adhered to the sides of the print head and other areas.

- Never touch the print head nozzles (areas indicated in blue in the diagram).

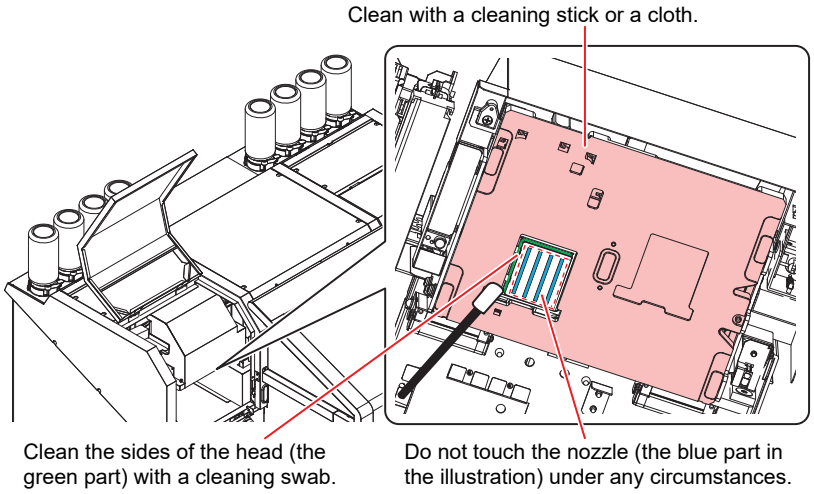

6 **When cleaning is complete, press the [ENTER] key.**

7 **Close the maintenance cover and press the [ENTER] key.**

- After the initial operation, it will return to the local system.

Cloth Wiper Area Cleaning

Continuing to use while dirty will cause dried ink and attached dust around the wiper to rub against the head nozzle surface, and lead to ejection failures (e.g., nozzle clogging or deflection).

- Be careful to avoid leaving fragments from the cleaning stick behind when cleaning. These fragments will increase the risk of ejection failures (e.g., nozzle clogging or deflection).

1 **On the LOCAL mode screen, select [MENU] > [Maintenance], then press the [ENTER] key.**

- The Maintenance menu is displayed.

2 **Select [Station Maintenance] > [Carriage Out] > [Left Side of Station], then press the [ENTER] key.**

3 **Open the maintenance cover on the right side.**

4 **Clean the wiper unit cover.**

- Wipe off any ink and dust adhering using a cleaning stick moistened with maintenance liquid. Wipe off the maintenance liquid. Make sure none remains.

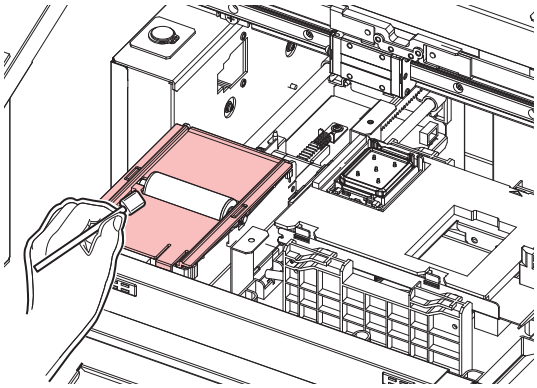

Important! • Be careful to avoid splashing maintenance liquid on the cloth wiper.

Cleaning the Mist Filter

1 **In local mode, press the [FUNC1](MENU) key.**

2 **Press ▲ ▼, select "Maintenance," and press the [ENTER] key.**

- The maintenance menu will be displayed.

3 **Press the [ENTER] key.**

- "Station Maintenance" will be selected.

4 **Press the [ENTER] key.**

- "Carriage Out" is selected, and the carriage moves.

5 **Open the maintenance cover on the left side.**

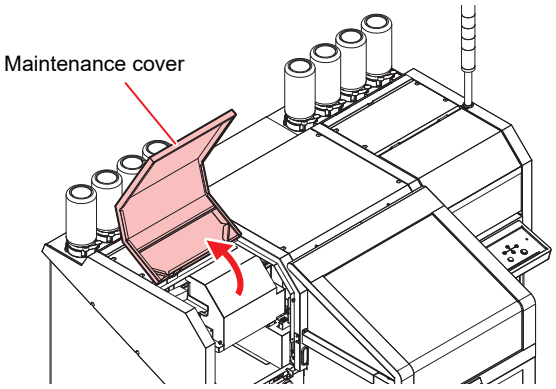

6 **Remove the mist filter.**

- There are two mist filters.
- While pressing the tab in the direction of the arrow, pull the handle toward the front to remove it.

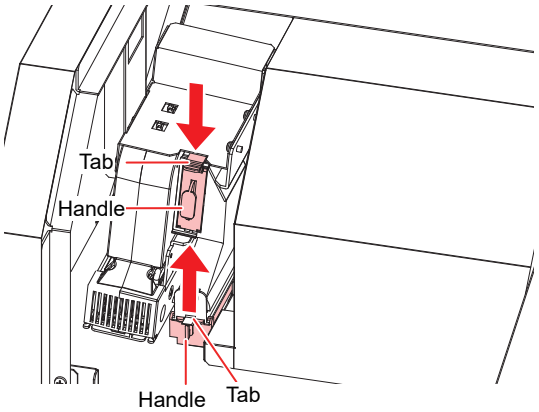

7 **Clean the filter.**

- Remove the filter and press it with a paper towel or similar to remove any dirt.
- Wipe off the dirt adhering to the filter case.

Important! If the filter is heavily soiled—for example, if the ink on the filter has liquefied—replace the filter (SPC-0819).☞ "Mist Filter Replacement"(P. 103)

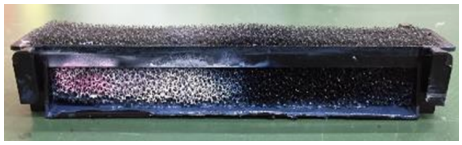

8 **Return the mist filter to its original position.**

9 **Close the maintenance cover and press the [ENTER] key.**

- After the initial startup, it will return to local mode.

Cap Rubber Cleaning

1 **In local mode, press the [FUNC1] (MENU) key.**

2 **Press ▲ ▼, select “Maintenance,” and press the [ENTER] key.**

- The Maintenance menu is displayed.

3 **Press the [ENTER] key.**

- "Station Maintenance" is selected.

4 **Press ▼, then press the [ENTER] key.**

- “Nozzle Washing” is selected, and the carriage moves.

5 **Open the maintenance cover.**

6 **Clean the cap rubber and press the [ENTER] key.**

- Use a cleaning stick moistened with maintenance cleaning solution to wipe off any ink that has adhered to the cap rubber.
- Clean the areas indicated in red (the entire interior and exterior of the cap rubber and the tabs) in the diagram.
- Be sure to wipe off the maintenance cleaning solution completely so that no residue remains.
- At this point, the drain line is automatically flushed.

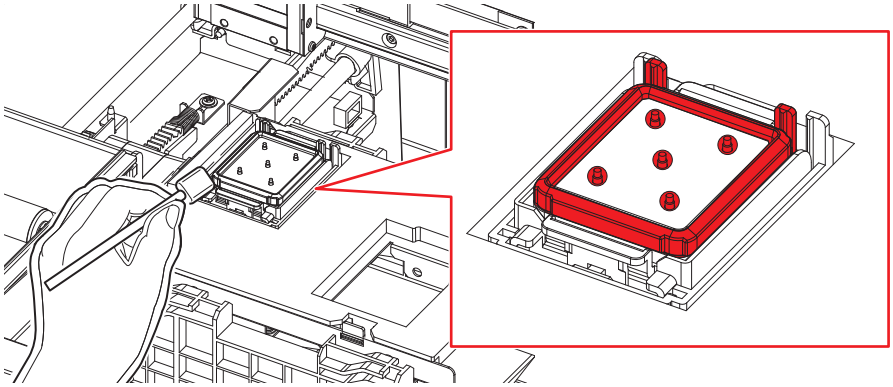

7 **Fill the container with one capful of maintenance cleaning solution.**

- Fill the syringe with maintenance cleaning solution until the cap is full. Fill the container with cleaning solution until it is almost overflowing from the cap.

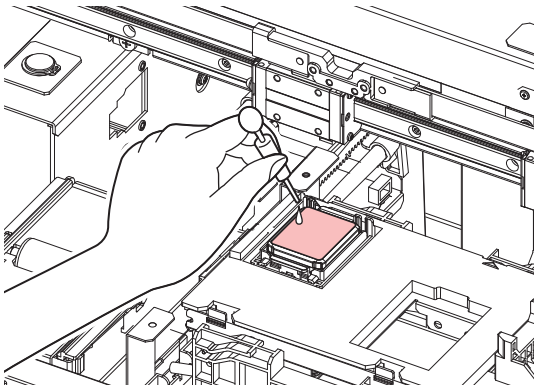

8 **Close the maintenance cover and press the [ENTER] key.**

9 **Press ▲ ▼ to set the cleaning solution dwell time, then press the [ENTER] key.**

- Setting: 1 to 99 minutes (in 1-minute increments)
- Suck up the cleaning solution until the cap is full.
- The message “Please wait a moment” will appear on the display until the set time has elapsed.

Important! If the nozzle disengagement problem persists even after executing nozzle recovery or executing this nozzle washing cycle several times, please contact your dealer, one of our service offices, or our service office.

Cleaning the Ink Discharge Channels

To prevent ink clogs caused by ink solidifying inside the ink channels, please clean the ink channels regularly (about once a week).

1 **In local mode, press the [FUNC1] (MENU) key.**

2 **Press ▲ ▼, select “Maintenance,” and press the [ENTER] key.**

- The Maintenance menu is displayed.

3 **Press the [ENTER] key.**

- "Station Maintenance" is selected.

4 **Press ▼ twice, then press the [ENTER] key.**

- "Flush Path" is selected, and the carriage moves onto the platen.
- Repeat the air suction cycle until the cleaning process is complete.

5 **Open the maintenance cover on the right side.**

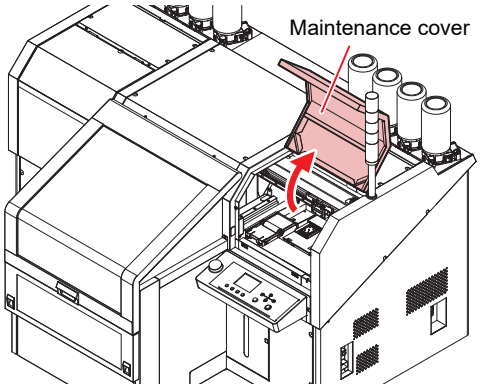

6 **Press the [ENTER] key.**

- Repeat the vacuuming process until the cleaning is complete.

7 **Fill the container with one capful of maintenance cleaning solution.**

- Fill the syringe with maintenance cleaning solution until it is full to the brim. Fill the container with cleaning solution until it is almost overflowing from the cap.

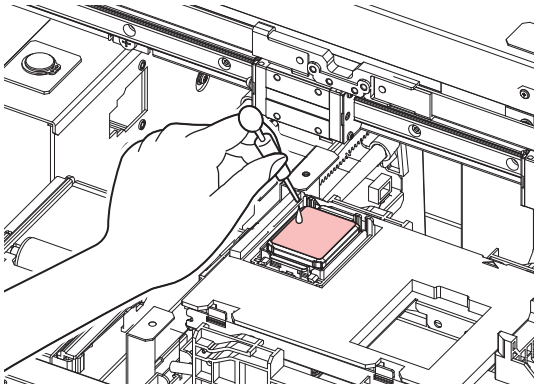

8 **Close the maintenance cover and press the [ENTER] key.**

Cleaning the Table

The table tends to get dirty from lint and paper dust generated when cutting media.
If dirt is visible, wipe it off with a soft-bristled brush, a dry cloth, or a paper towel.

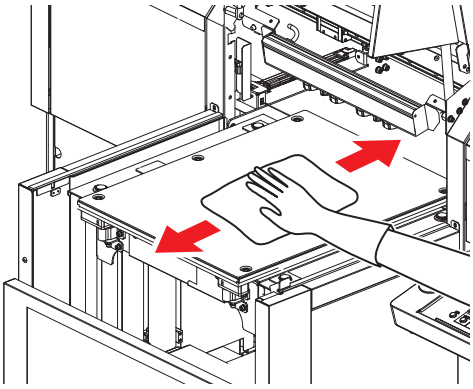

Important! Dirt tends to accumulate particularly in the grooves around the table and in the screw holes used to secure jigs, so please clean these areas thoroughly.

If ink has gotten on the surface, soak a paper towel in the maintenance cleaning solution and wipe it off.

Exterior Cleaning

If the exterior of the unit becomes dirty, dampen a soft cloth with water or a neutral detergent diluted in water, wring it out thoroughly, and then wipe the surface clean.

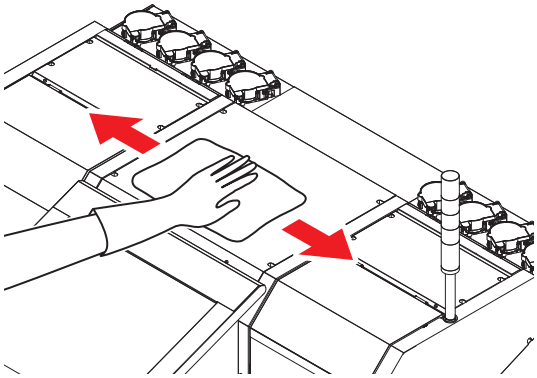

If the product will not be used for an extended period of time

If you won't be using the printer for more than a week, use the storage cleaning function to perform head cleaning and ink passage cleaning. After that, please store the machine.

Important! Please keep the main power supply turned on at all times. To protect the head nozzle, a feature that prevents nozzle clogging is activated automatically.

Leaving the main power supply switch in the "Off" position for an extended period of time can cause head nozzle clogging.

Check beforehand
Are [Near End] and [Ink End] not displayed?

Check beforehand
• During the cleaning cycle, the machine draws in cleaning fluid and ink. If the printer detects that the ink end or near-end condition is present at this time, it will be unable to perform the cleaning operation.

If the warning message “Check Waste Ink Tank” appears, check the waste ink tank and, depending on the situation, refer to "Maintenance of the Waste Ink Tank"(P. 104) for instructions.

1 **In local mode press the [FUNC1] (MENU) key.**

2 **Press ▲ ▼, select “Maintenance,” and press the [ENTER] key.**

- The Maintenance menu is displayed.

3 **Press the [ENTER] key.**

- "Station Maintenance" is selected.

4 **Press ▼ three times, then press the [ENTER] key.**

- "Storage and Cleaning" is selected, and the carriage moves onto the platen.

Important! The display will show “Finished” until the cap cleaning is complete. Please press the [ENTER] key after completing the steps in Step 5. If you press the [ENTER] key before the cleaning cycle is complete, the machine will proceed to the next cleaning step.

5 **Clean the cap rubber.**

- Use a cleaning stick moistened with maintenance cleaning solution to wipe off any ink that has adhered to the cap rubber.
- Clean the areas indicated in red (the entire interior and exterior of the cap rubber and the tabs) in the diagram.
- Be sure to wipe off any maintenance cleaning solution so that no residue remains.
- At this point, the drain line is automatically flushed.

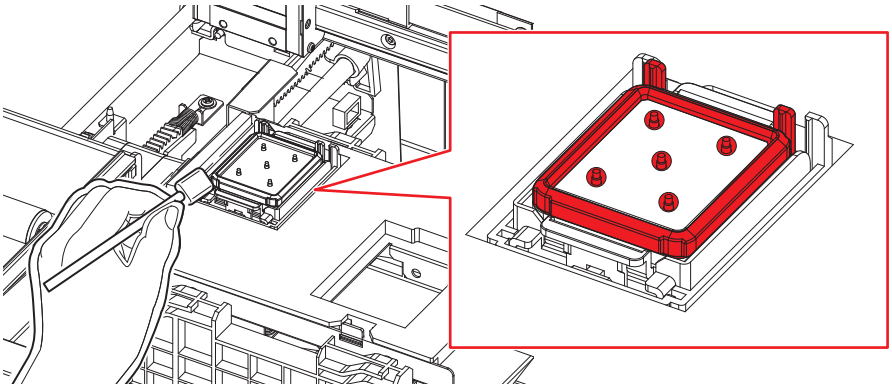

6 **Press the [ENTER] key.**

Important! Until the cleaning solution is filled to the proper level, the display will show [Complete (Next): ENT]. After completing the steps in Step 8 and closing the maintenance cover, press the [ENTER] key. If you press the [ENTER] key before filling the tank with cleaning solution, the carriage will return to its original position.

7 **Fill the container with one capful of maintenance cleaning solution.**

- Fill the syringe with maintenance cleaning solution until it is full to the brim. Fill the container with cleaning solution until it is almost overflowing from the cap.

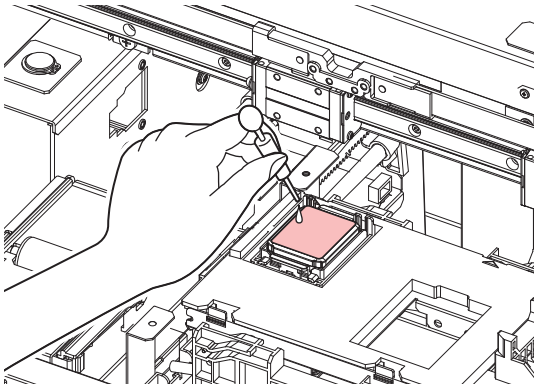

8 **Close the maintenance cover and press the [ENTER] key.**

9 **Press ▲ ▼ to set the soaking time for the cleaning solution.**

- Setting range: 1–99 minutes (in 1-minute increments)

10 **Press the [ENTER] key.**

- Execute nozzle washing.
- Once the nozzle washing is complete, the print head moves to the maintenance position.

11 **Open the maintenance cover.**

12 **Fill the container with one capful of maintenance cleaning solution.**

- Fill the syringe with maintenance cleaning solution until it is full to the brim. Fill the container with cleaning solution until it is almost overflowing from the cap.

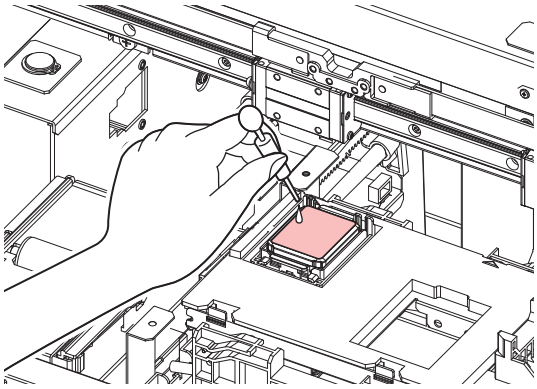

13 **Close the maintenance cover and press the [ENTER] key.**

- After the initial operation, the display will return to the screen shown in Step 2.

NCU Cleaning

The NCU uses a sensor to monitor the ink droplets ejected from the print head nozzles. Continuing to use the dirty NCU may prevent the nozzle check function from operating correctly.

- Be careful to avoid leaving fragments from the cleaning stick behind when cleaning. These fragments will increase the risk of ejection failures (e.g., nozzle clogging or deflection).

1 **Open the maintenance cover on the left side.**

2 **Clean the NCU.**

- Wipe off any ink and dust adhering using a cleaning stick moistened with maintenance liquid. Wipe off the maintenance liquid. Make sure none remains.

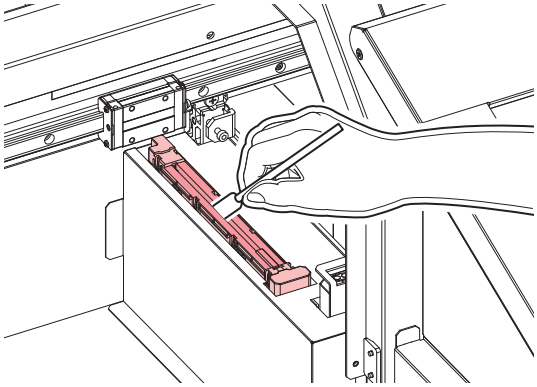

- Insert the cleaning stick as far as the line shown in the illustration.

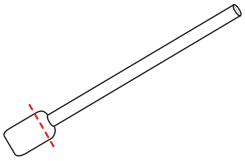

DAS (Automatic Correction Function) Sensor Cleaning

The DAS sensor is located on the carriage underside. If dust or debris accumulates on the sensor, the DAS (03_Automatic Correction) function may not execute properly.

1 **On the LOCAL mode screen, select [MENU] > [Maintenance], then press the [ENTER] key.**

- The Maintenance menu is displayed.

2 **Select [Station Maint.] > [Carriage Out] > [Move To Maint. Space], then press the [ENTER] key.**

- The carriage moves to the left edge of the machine.

3 **Open the maintenance cover.**

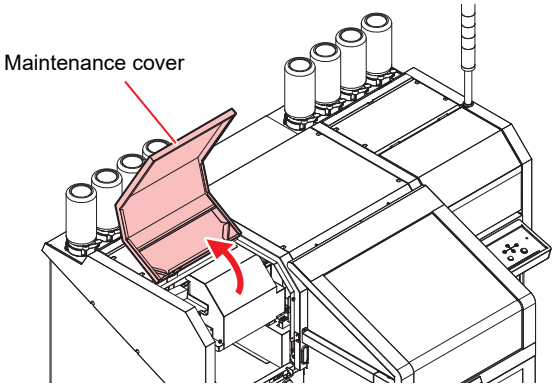

4 **Clean the DAS sensor.**

- Wipe clean using cotton swabs or a soft cloth.

- For heavy soiling, wipe using a soft cloth soaked in diluted neutral detergent and thoroughly wrung out.

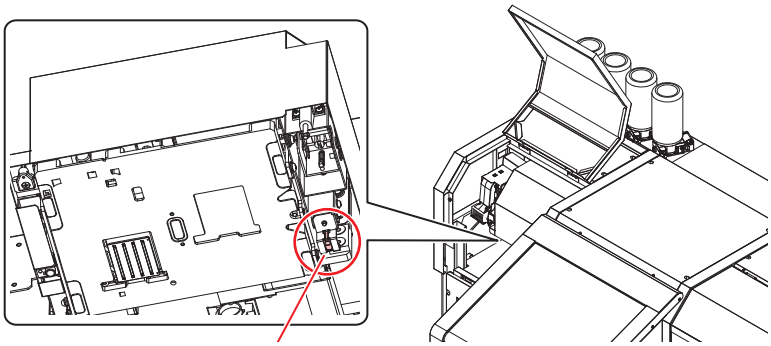

5 **Once cleaning is complete, close the cover, then press the [ENTER] key.**

4.3 Replacement of Consumable Item

Cloth Wiper Replacement

Replace cloth wipers with new ones when they have run out.

SPC-0919 cloth wipers

- Precautions are included with the cloth wipers. Thoroughly read them and make sure you understand the contents.
- When disposing of cloth wipers, **be sure to place them in a sealed bag.** Contact an industrial waste disposal operator or dispose of in accordance with the local laws and regulations.
- When handling cloth wipers, ensure adequate ventilation and take care not to inhale the solvent fumes.

- When handling **SPC-0919 cloth wipers**, be sure to wear safety glasses, gloves, and a mask. There is a risk of the liquid (solvent) contained in cloth wipers splashing and contacting your skin, eyes, or mouth.

1 **"Wiper End" appears on the display.**

2 **On the LOCAL mode screen, select [MENU] > [Maintenance], then press the [ENTER] key.**

- The Maintenance menu is displayed.

3 **Select [Station Maint.] > [Replace Wiper], then press the [ENTER] key.**

- The carriage moves across the table, and the cloth wiper cassette moves forward.

4 **Open maintenance cover R.**

5 **Open the cloth wiper cover.**

- Push the two tabs at the front up to open.

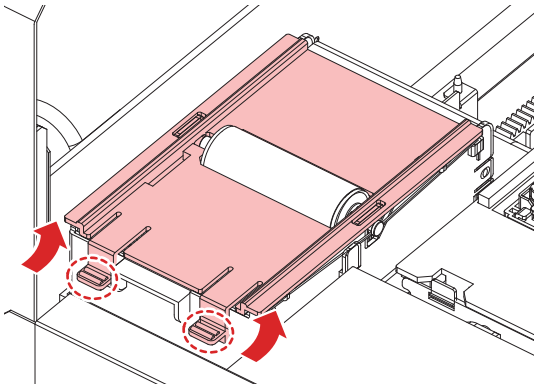

6 **Remove the wiper together with the spindle.**

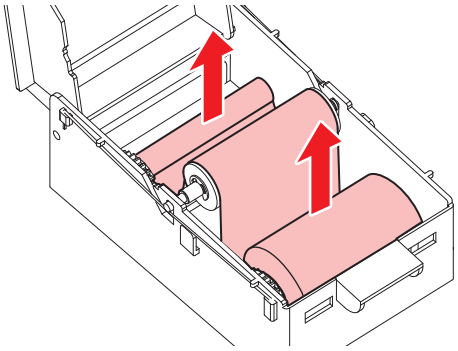

7 **Remove the wiper from the spindle.**

- When disposing of ink, maintenance liquid or other liquid used with the product, or containers or non-woven fabric contaminated with ink or other liquid, contact an industrial waste disposal operator or dispose of the product in accordance with the local laws and regulations.

8 **Clean the wiper unit underside.**

- Wipe off any ink and dust adhering using a cleaning stick moistened with maintenance liquid. Wipe off the maintenance liquid. Make sure none remains.

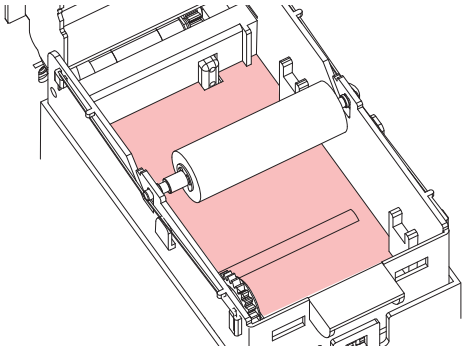

9 **Clean the wipe roller.**

- Wipe off any ink and dust adhering using a cleaning stick moistened with maintenance liquid. Wipe off the maintenance liquid. Make sure none remains.

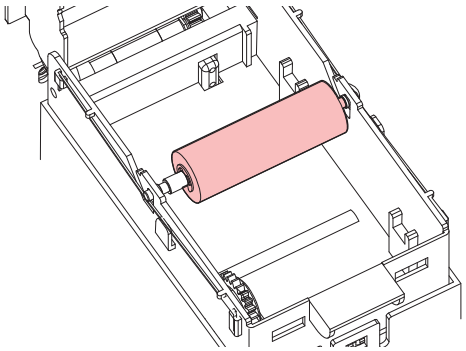

10 Clean the pinch rollers.

- Gently wipe off any dust adhering with a soft cloth.

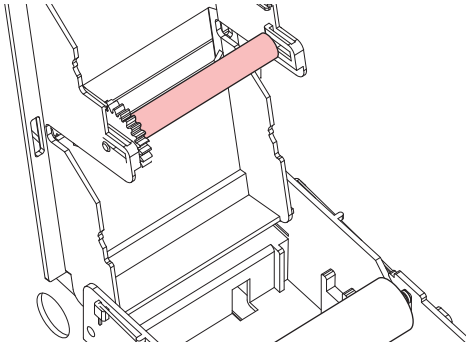

- Do not wipe too hard. Wiping too hard may degrade the sponge.

11 Mount a new cloth wiper.

(1) Remove the cloth wiper from the bag.

(2) Unroll the side with more cloth on it.

[When removed from bag]

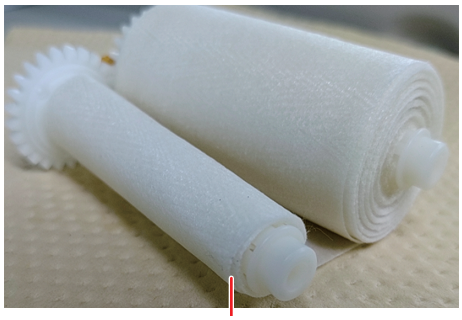

Wound approximately three times

[When mounted in the wiper unit]

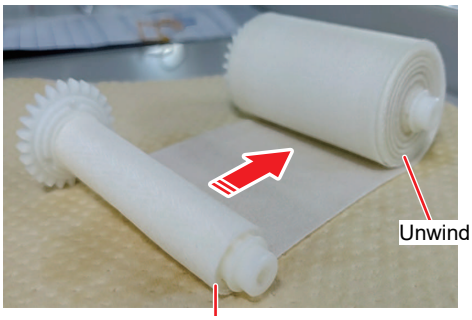

Do not unwind!

(3) Mount a new cloth wiper.

- Mount the cloth wiper with the gear on the left.

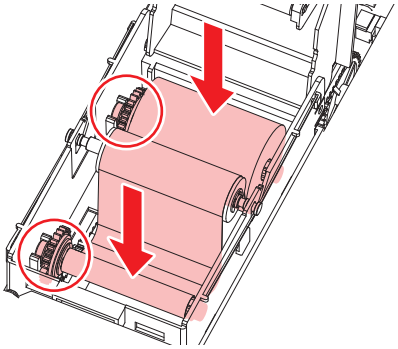

Important!

- If no cloth is wound around the spindle, wind the cloth around the spindle three times before mounting. If the cloth is mounted with no cloth wound around the spindle, the cloth may become detached from the wiper unit.

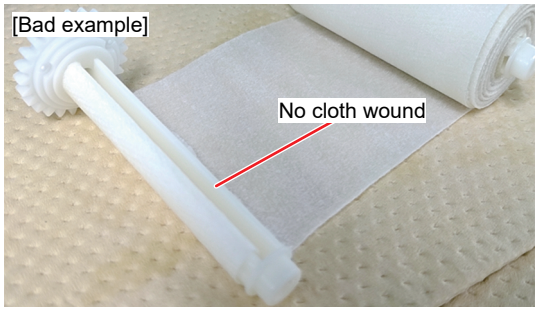

12 **Close the cloth wiper cover and maintenance cover.**

13 **Close the maintenance cover, then press the [ENTER] key.**

- The remaining amount of cloth wiper is reset.

Mist Filter Replacement

1 **In local mode, press the [FUNC1] (MENU) key.**

2 **Press ▲ ▼, select "Maintenance," and press the [ENTER] key.**

- The Maintenance menu is displayed.

3 **Press the [ENTER] key.**

- "Station Maintenance" is selected.

4 **Press the [ENTER] key.**

- "Carriage Out" is selected, and the carriage moves.

5 **Open the maintenance cover on the left side.**

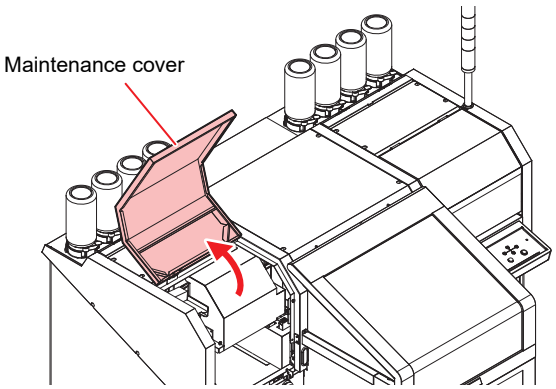

6 **Remove the mist filter.**

- There are two mist filters.
- While pressing the tab in the direction of the arrow, pull the handle toward the front to remove it.

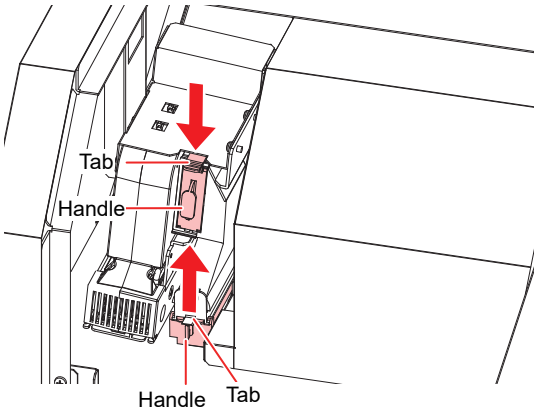

7 **Replace it with a new filter (SPC-0819).**

8 **Insert the mist filter.**

9 **Close the maintenance cover and press the [ENTER] key.**

- After the initial operation, it will return to the local system.

Maintenance of the Waste Ink Tank

Ink used during head cleaning and other operations accumulates in the waste ink tank located at the bottom right of the machine. The machine keeps a cumulative count of the amount of ink dispensed, and when a certain amount is reached, a message will appear prompting you to check the ink level. Please use this as a guideline for replacing the waste ink tank.

A message appears when the 2.0L waste ink tank (SPA-0173) reaches 80% capacity (1.6L).

Waste Ink Confirmation Message

1 **A warning message saying “Check waste ink tank” appears on the display.**

2 **Follow the steps in ☞ "Procedures for Disposing of Waste Ink"(P. 105) to empty the waste ink tank.**

- If there is a discrepancy between the actual amount and the reading, press ▲ ▼ to calibrate.

Important! If you continue to use the machine without disposing of the waste ink, there is a risk that waste ink will overflow from the waste ink tank.

If you replace the waste ink tank before the waste ink tank check message appears

If you replace the waste ink tank before the waste ink tank status message appears (before the 2.0L tank reaches 80% capacity (1.6L)), follow the same procedure as described in the previous section.

1 **Execute the steps in ☞ "Procedures for Disposing of Waste Ink"(P. 105) to empty the waste ink tank.**

Procedures for Disposing of Waste Ink

Please follow the steps below to dispose of waste ink.

1 **In local mode, press the [FUNC1] key (MENU).**

2 **Press ▲ ▼, select “Maintenance,” and press the [ENTER] key.**

- The Maintenance menu is displayed.

3 **Press the [ENTER] key.**

- "Station Maintenance" is selected.

4 **Press ▲ ▼ to select “waste ink tank,” then press the [ENTER] key.**

- "Waste Ink Tank" is selected.

5 **Remove the waste ink tank.**

(1) Press the lug on the waste ink tank box.

- The magnet releases, and the door opens.

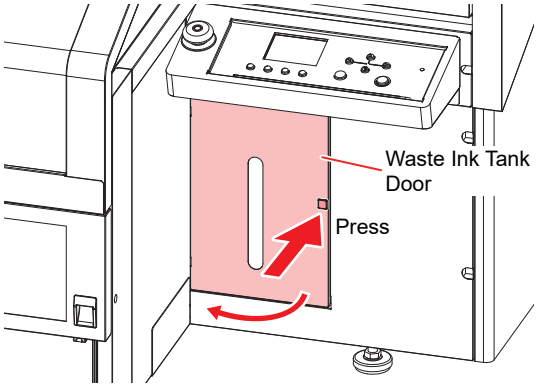

(2) Hold the waste ink tank and pull it toward the front to remove it.

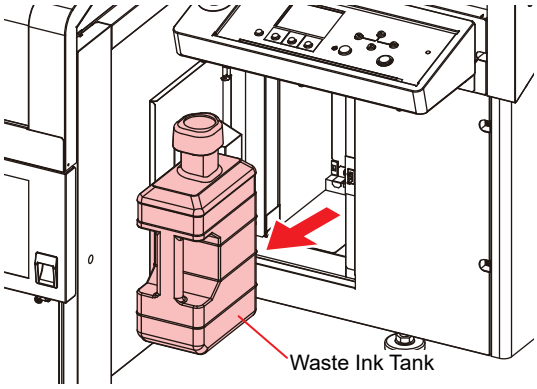

Put a cap on the waste ink tank removed.

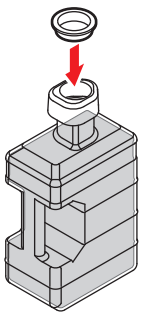

6 **Empty the waste ink tank.**

- Please transfer the waste ink to a separate polyethylene tank or prepare a new waste ink tank (SPA-0173).

7 **Hold the handle of the waste ink tank and place it inside the waste ink tank box.**

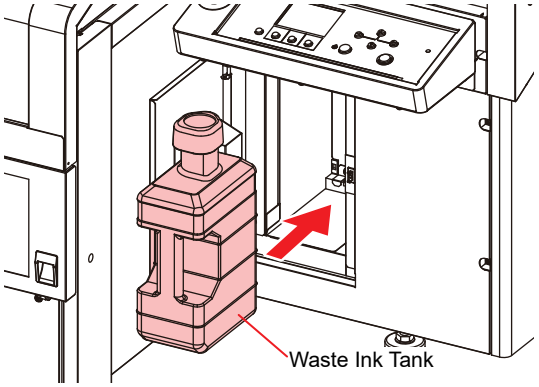

Please have industrial waste disposal companies dispose of waste ink.

8 **Press the [ENTER] key.**

- Reset the ink usage managed by the machine to clear the message.

Cap Replacement

If ejection failures (e.g., nozzle clogging or deflection) remain unresolved even after cleaning, replace with a new cap.

- Be sure to replace the cap if you observe any scratches or other damage on the rim.



1 **On the LOCAL mode screen, select [MENU] > [Maintenance], then press the [ENTER] key.**

- The Maintenance menu is displayed.

2 **Select [Station] > [Carriage Out] > [Move To Platen Right End], then press the [ENTER] key.**

- The carriage moves over the table.

3 **Open the front cover.**

4 **Remove the cap.**

- Squeeze the lugs on either side of the cap and pull off.

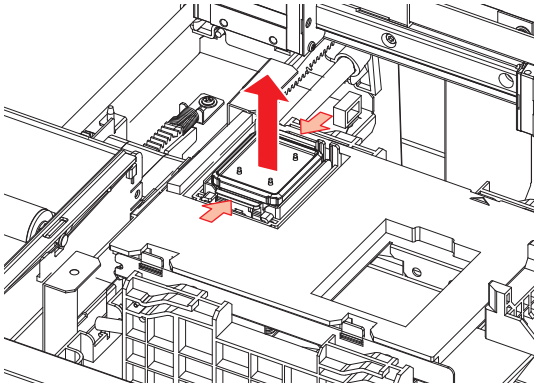

5 **Apply maintenance liquid.**

- Use a syringe to apply two or three drops of maintenance liquid to the hole at the front.

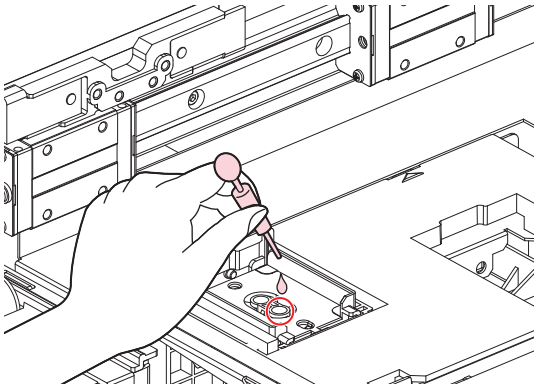

6 **Mount a new cap.**

- Position with the slot at the front and push in until it clicks.

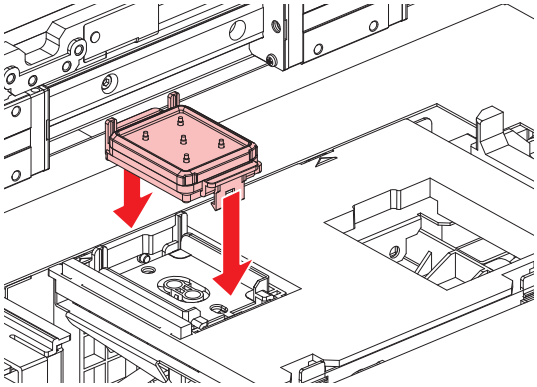

Replacing the Deodorizer Filter

- The deodorizer is an optional accessory for the UJF200-3042 / 6042. (OPT-J0515)

If you are using the optional deodorizer, you will need to replace the deodorizer filter.

Deodorizer filters are consumable items. Please replace the following filter. The recommended replacement interval is two months.

- Deodorizer Filter A (SPC-0896): Pre-filter, semi- HEPA filter
- Deodorizer Filter B (SPC-0897): Activated carbon filter



1	pre-filter	-
2	semi- HEPA filter	-
3	Activated carbon filter	Use a Phillips-head screwdriver to replace the activated carbon.

- Please wear a cut-resistant glove while working. There is a risk of injury to your fingers or hands.

1 Unlock the draw latch and open the door of the deodorizer.

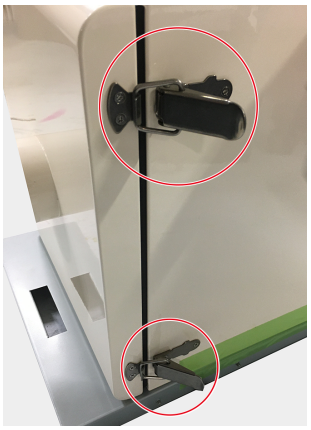

2 **Remove the pre-filter.**

- Turn the two knobs on the top and bottom of the pre-filter to loosen them, then pull the pre-filter toward the front to remove it.

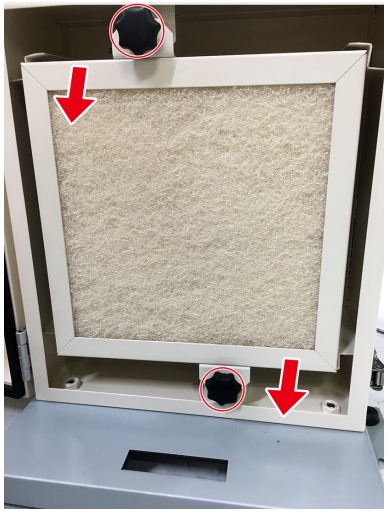

3 **Replace the filter material in the pre-filter.**

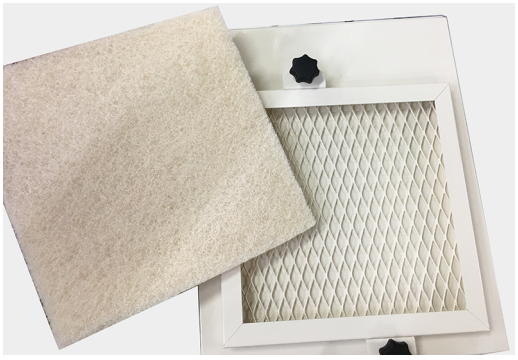

4 **Remove the semi- HEPA filter.**

- Pull the semi- HEPA filter toward the front to remove it.
- For the semi- HEPA filter, please replace the entire semi- HEPA filter assembly with a new one.

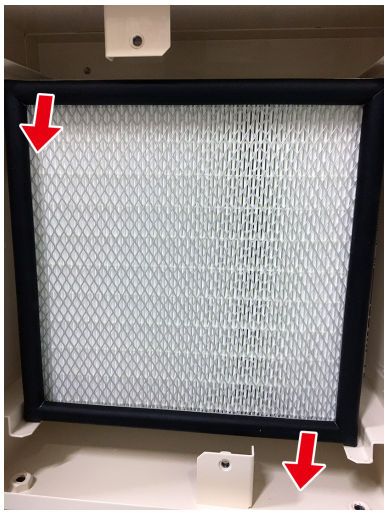

5 **Remove the activated carbon filter.**

- Pull the activated carbon filter toward the front to remove it.

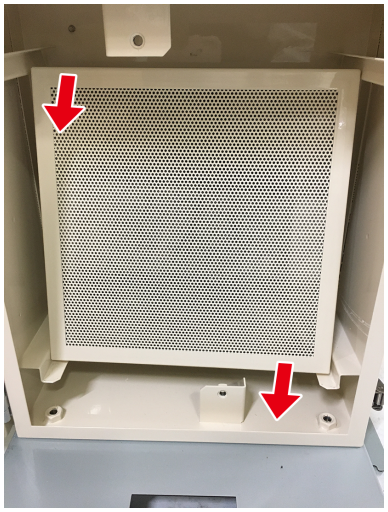

6 Replace the activated carbon and the filter sheet.

(1) Remove the screws (x4).

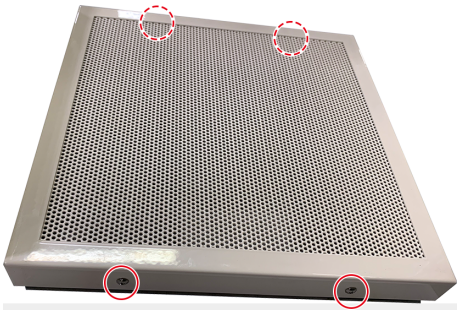

(2) Dispose of the activated carbon and the sheet.

- Please dispose of the activated carbon and the sheet in accordance with local ordinances.

(3) Place a new sheet on the bottom cover.

(4) Place the new activated carbon on the sheet and spread it out evenly.

- The new activated carbon is in a vacuum pack to preserve its deodorizing effectiveness. Open the package immediately before use.

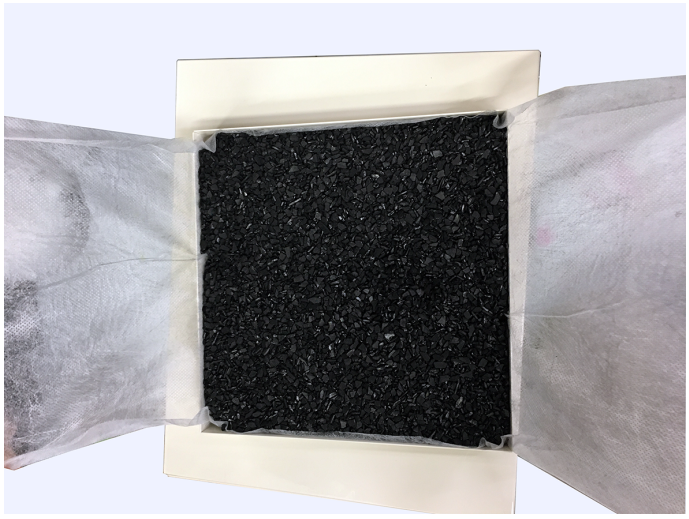

(5) Cover the activated carbon with a sheet.



(6) Attach the top cover using the four screws.

7 **Install the deodorizer components in the following order, following the instructions: 1. Activated carbon filter, 2. semi- HEPA filter, and 3. pre-filter.**

- Please be careful not to mix up the order or orientation of the filters.
- When installing the semi- HEPA filter, make sure the arrow on the top seal points toward the rear.

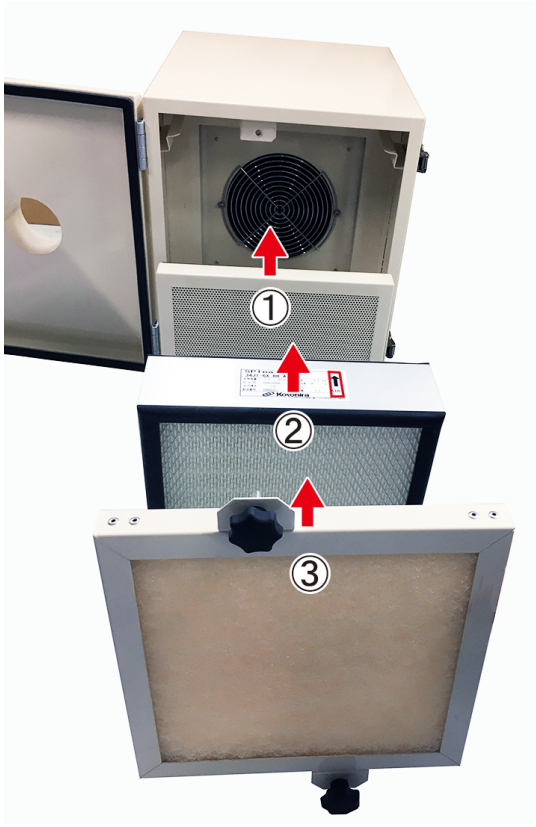

8 **Turn the two knobs on the top and bottom of the pre-filter to secure it.**

9 **Close the door.**

10 **Draw the draw latch into place.**

Chapter 5 Troubleshooting



This chapter

Check again before deciding the trouble as malfunction.

Before You Start Thinking There Might Be A Failure 114
If you experience poor image quality: 114
When you want to clear a nozzle clogging114
Problems Causing Messages to Appear 115
Warning Messages 115
Ink Error 116
Error Message 117

5.1 Before You Start Thinking There Might Be A Failure

If you experience poor image quality:

This section explains the corrective action to take if you're experiencing print quality issues. Please take appropriate action based on your symptoms.

If the problem persists even after taking these steps,contact your local distributor, our sales office, or service center.

Symptom	Corrective action
White stripes / blurs / dark stripes appear (in the direction the print head moves).	1. Please perform head cleaning. 2. Please perform maintenance inside the station. 3. Please execute the "feed correction" function. (☞ "Feed Correction Settings"(P. 73)) 4. Please perform nozzle washing on the head nozzle.
The text appears double or triple in the paper feed direction.	1. Please execute the "feed correction" function. (☞ "Feed Correction Settings"(P. 73))
Ink droplets fall while printing.	1. Please clean the wipers. 2. Please perform cleaning on the ink cap. 3. Please clean the area around the head. 4. Please execute a [Normal] head cleaning. 5. Please set the auto-cleaning interval to a shorter time. (Setting of AUTO CLEANING) 6. Please execute an overflow maintenance.

When you want to clear a nozzle clogging

If the nozzle clog does not clear even after performing a head cleaning, please check the following items.

- **Please follow the instructions in ☞ "Cap Rubber Cleaning"(P. 92) o perform nozzle washing on the head nozzle.**
- **Please perform the ☞ "Registering Nozzle Recovery"(P. 77) operation and carry out nozzle recovery.**

5.2 Problems Causing Messages to Appear

If a problem arises, the buzzer sounds and a message appears on the display.

Please respond appropriately based on the content of the message.

Warning Messages

Message	Cause	Corrective action
Replace NCU Ink Pad	• The ink absorber needs to be replaced.	• The NCU ink absorber must be replaced. Contact your local distributor, our sales office, or service center.
Replace NCU	• A problem was detected with the nozzle clogging assessment.	• The NCU must be replaced. Contact your local distributor, our sales office, or service center.
NCU Sensor Lv Low	• The sensor's sensitivity is impaired.	• Clean the NCU. ☞ "NCU Cleaning"(P. 97) • Replace the NCU if the error does not clear. Contact your local distributor, our sales office, or service center.
NCU Sens Adj Err H	• Sensor sensitivity adjustment failed.	
NCU Sens Adj Err L		
NCU Connect	• A problem was detected with the NCU connection.	• Turn off the power on the machine and turn it on after a while.☞ "Turning Off the Power"(P. 37)
Ink Error	• An ink error occurred.	• Check the ink error details. ☞ "Ink Error"(P. 116)
Please close the cover Please disengage the switch*	• The maintenance cover is open. Or the emergency stop switch has been pressed.	• Close the cover. Or release the emergency stop switch.
Front Cover Open	• The front cover is open.	• Close the front cover.
Data Remain	• Print (RIP) data was received.	• Switch to REMOTE mode and start printing or clear the data and abort printing.
Temporary Suspension	• Printing has been paused.	• Switch to REMOTE mode and resume printing or clear the data and abort printing.
Printing not possible/ink IC	• An unusable ink IC chip is used.	• Replace with new ink and a new ink IC chip. ☞ "Replacing Ink"(P. 43)
Wiper Move Failure	• The wiper is not operating correctly.	• Turn off the power on the machine and turn it on after a while.☞ "Turning Off the Power"(P. 37)
Replace Wasteinktank	• The waste ink tank count exceeded the preset value (90%).	Automatic maintenance is not possible while the covers are open. Perform the following steps: 1. Check the waste ink levels in the waste ink tank. ☞ "Waste Ink Confirmation Message"(P. 104) 2. Replace the waste ink tank, then reset the waste ink level. ☞ "Procedures for Disposing of Waste Ink"(P. 105)

Message	Cause	Corrective action
Check Waste Ink tank	• The waste ink tank count exceeded the preset value (80%).	1. Check the waste ink levels in the waste ink tank. ☞ "Waste Ink Confirmation Message"(P. 104) 2. Replace the waste ink tank, then reset the waste ink level. ☞ "Procedures for Disposing of Waste Ink"(P. 105)
High ambient temp ** ˚ C	• Ambient temperatures are too high.	• Adjust ambient temperatures to temperatures within the specified range. Optimum print quality may not be possible unless ambient conditions are within the specified range. ☞ "Installation Precautions"(P. 16)
Low ambient temp ** ˚ C	• Ambient temperatures are too low.	
Wiper End	• The cloth wiper has run out.	• Replace with a new cloth wiper. ☞ "Cloth Wiper Replacement"(P. 100)
Wiper Near End	• The remaining amount of cloth wiper is low.	• Replace with a new cloth wiper. ☞ "Cloth Wiper Replacement"(P. 100)

Ink Error

Message	Cause	Corrective action
Ink End	• The ink has run out.	• Replace with new ink. ☞ "When Ink End is Displayed"(P. 43)
Ink Near End	• Ink levels are low.	• The ink will run out soon. Have new ink ready. ☞ "When Ink Near End is Displayed"(P. 43)
Non Ink IC	• No ink IC chip was detected.	1. Insert the ink IC chip.☞ "Replacing Ink"(P. 43) 2. Check to confirm the ink IC chip was inserted correctly. ☞ "Replacing Ink"(P. 43) 3. Turn off the power on the machine and turn it on after a while.☞ "Turning Off the Power"(P. 37)
Wrong Ink IC	• An error occurred with the information on the ink IC chip.	1. Check to confirm the ink IC chip was inserted correctly. ☞ "Replacing Ink"(P. 43) 2. Turn off the power on the machine and turn it on after a while.☞ "Turning Off the Power"(P. 37) 3. Replace with new ink. ☞ "Replacing Ink"(P. 43)
Ink Color	• The ink color registered on the IC chip is different from the ink color filled.	• Insert an ink IC chip for the correct ink color. ☞ "Replacing Ink"(P. 43)
Ink Type	• The ink type registered on the IC chip is different from the ink type filled.	• Insert an ink IC chip for the correct ink type. ☞ "Replacing Ink"(P. 43)
Expiration Near	• The ink has expired.	• Replace with new ink or use up as quickly as possible. Printing is possible. ☞ "When Ink End is Displayed"(P. 43)

Message	Cause	Corrective action
	• It's been a month since the ink expired.	• Replace with new ink or use up as quickly as possible. Printing is possible. ☞ "When Ink End is Displayed"(P. 43)
Expiration Over	• It's been two months since the ink expired.	• Replace with new ink. Printing is not possible. ☞ "When Ink End is Displayed"(P. 43)

Error Message

Error number	Message	Cause	Corrective action
04	PARAM ROM	• A problem was detected with the main PCB.	• Turn off the power on the machine and turn it on after a while.☞ "Turning Off the Power"(P. 37)
108	HD THERMIS[1_]	• A problem was detected with print head temperature control.	
108	HD CONNECT[1_]	• A problem was detected with the print head connection.	
108	HD MEM EMP[1_]	• A problem was detected with the print head.	
10e	FROM CLEAR	• A problem was detected with the main PCB.	
10f	FROM WRITE		
115	PCB MAIN-F1		
15f	HEAD DRIVE HOT	• The HDCE PCB COM driver is hot.	
1d8	HEAD XHOT[12]	• A head error has been detected.	
122	CHECK:SDRAM	• A problem was detected with the SDRAM.	
122	PRAM NONE		
123	PRAM DATA	• A problem was detected with the main PCB.	
124	PRAM ADDR		
127	POWER OFF		
128	HDC FIFO OVER	• A problem was detected with the print head control PCB.	
128	HDC FIFO UNDER		
129	Battery Exchange	• The internal clock battery is spent and must be replaced.	• Contact your local distributor, our sales office, or service center.
12a	HDC SPEED	• A problem was detected with the print head control.	• Turn off the power on the machine and turn it on after a while.☞ "Turning Off the Power"(P. 37)
12d	PCB MAIN-F4	• A problem was detected with the main PCB.	
130	HD DATA SEQ	• A problem was detected with the print head control.	

Error number	Message	Cause	Corrective action
147	DS-IC BUSY	• Ink IC control abnormality detected.	
148	E-LOG SEQ	• A log control abnormality was detected.	
151	Main PCB V1R2	• A problem was detected with the main PCB power supply circuit.	
152	Main PCB V2R5		
153	Main PCB V3R3		
154	Main PCB V05		
155	Main PCB V42-1		
15f	HEAD DRIVE HOT	• The HDCE PCB COM driver is hot.	
171	NEW HEAD CONNECT	• A new print head connection was detected.	
186	HDC OVERFLOW	• A problem was detected with the print head control.	
186	HDC UNDERFLOW		
187	HDC SLEW RATE		
188	HDC MEMORY		
189	COM VOLT[12]	• A problem was detected with the HDCE PCB voltage.	
18c	Main PCB V12	• A problem was detected with the main PCB power supply.	
18e	FLS NOT COMP	• A problem was detected with the print head control.	
18f	OFSET START [1_]		
1b5	SLIDER CONNECT	• Unable to detect the HDCE PCB.	• Turn off the power on the machine and turn it on after a while.☞ "Turning Off the Power"(P. 37)
1bf	PCB MAIN-F2	• A problem was detected with the main PCB.	
1e6	PRAM Size Shortage	• Insufficient memory	
201	Command Error	• Data other than print (RIP) data was received, or a problem was detected with the print (RIP) data received.	1. Clear the data and resend. 2. Check the USB cable connection. ☞ "Using a USB Cable"(P. 38) 3. Use a compatible cable. ☞ "USB Connection Precautions"(P. 38) 4. Turn off the power on the machine and turn it on after a while.☞ "Turning Off the Power"(P. 37)
202	Parameter Error	• A problem was detected with the print (RIP) data received.	
206	Print Mode Error	• Print (RIP) data was received with print parameters that do not allow printing.	• Change the output parameters and profile using RIP software.
20A	Driver Version	• Printing is not possible because the Mimaki driver version is old.	• Install the latest Mimaki driver available from: https://mimaki.com/download/inkjet.html

Error number	Message	Cause	Corrective action
303	PCB MAIN ET	• A problem was detected with the main PCB.	1. Turn off the power on the machine and turn it on after a while. "Turning Off the Power"(P. 37)
304	USB INIT ERR	• A problem was detected with the USB cable connection.	1. Check the USB cable connection. "Using a USB Cable"(P. 38) 2. Use a compatible cable. "USB Connection Precautions"(P. 38) 3. Turn off the power on the machine and turn it on after a while. "Turning Off the Power"(P. 37)
305	USB TIME OUT		
318	SDcard Connection ERR	• A problem was detected with the SD card.	1. Turn off the power on the machine and turn it on after a while. "Turning Off the Power"(P. 37)
401	Motor X	• The X motor was overloaded.	1. Check to confirm the media is loaded correctly. "Loading the Media"(P. 53) 2. Open the front cover and check for anything that may obstruct carriage movement. 3. Turn off the power on the machine and turn it on after a while. "Turning Off the Power"(P. 37)
402	Motor Y	• The Y motor was overloaded.	
403	X Current	• An overcurrent error was detected in the X motor.	
404	Y Current	• An overcurrent error was detected in the Y motor.	
406	Wiper Move Failure	• The wiper origin could not be detected.	• Turn off the power on the machine and turn it on after a while. "Turning Off the Power"(P. 37)
467	ZSTPOUT: 12	• Z-axis step-out was detected.	
48b	Y MOTOR COM	• Y motor communication is not possible.	• Turn off the power on the machine and turn it on after a while. "Turning Off the Power"(P. 37)
48c	Y MTR I2C COM	• Y motor communication is not possible at startup.	
496	Y MOTOR DIR	• The Y motor operating direction cannot be specified.	• Turn off the power on the machine and turn it on after a while. "Turning Off the Power"(P. 37)
4c9	ZMtrDrive HiTemp	• The Z-motor driver exceeded 65 degrees.	• If this occurs frequently, contact your local distributor, our sales office, or service center.
509	HDC POSCNT	• A problem was detected with position control.	• Turn off the power on the machine and turn it on after a while. "Turning Off the Power"(P. 37)
50a	Y Org Detect Error	• A problem was detected with Y origin detection (initialization).	
50f	L-SCALE BLACK	• A problem was detected with the linear scale.	
511	Z Org Detect Error	• A problem was detected with Z origin detection (initialization).	
525	Wrong Ionizer	• The ionizer internal circuit is defective, or an abnormal discharge occurred.	• Turn off the power on the machine and turn it on after a while. "Turning Off the Power"(P. 37)

Error number	Message	Cause	Corrective action
526	Ionizer Ion Level	• The amount of generated ions was reduced by fouling and abrasion of the electrode needle.	• Refer to the instruction manual for the ionizer and clean the electrodes.
527	Ionizer Condition	• Ambient conditions may cause ions to be absorbed by metals in the vicinity and affect discharge capability.	• Remove any conductors or discharge devices close to the ionizer.
528	Pump Motor	• A problem was detected with the pump motor.	• Turn off the power on the machine and turn it on after a while.☞ "Turning Off the Power"(P. 37)
54c	Vacuum Fan Err	• A problem was detected with the vacuum fan.	
547	!High Workload	• An obstruction was detected.	• Remove any obstructions from on top of the media. • Increase the head gap setting or media thickness setting to lower the media feeding belt height.
54d	HDCE Cooling Fan Err	• An HDCE cooling fan rotation abnormality was detected.	• Turn off the power on the machine and turn it on after a while.☞ "Turning Off the Power"(P. 37)
54e	UV-LED Fan Err	• A UV-LED cooling fan rotation abnormality was detected.	• Turn off the power on the machine and turn it on after a while.☞ "Turning Off the Power"(P. 37)
559	Wiper End Sensor Malfunction	• The wiper fluid is running low.	• We're running out of wiper cloth rolls. • Please prepare a new roll of fabric.
55d	Kebab Cover/Media Set	• The main unit cover of the KebabHS is open. Or, the light-blocking cover is not installed.	• Set the workpiece in place and attach the main unit cover. • Please install the light-blocking cover. *1 • Please push the slide spring back in. *1 • Please make sure the cable connecting the KebabHS unit to the power supply is plugged in.
56b	KebabHS UV Fan Malfunction	• The KebabHS UV Cooling Fan detected an abnormal rotation speed.	• Remove the main unit cover and let it sit for a few minutes. • If the display does not disappear even after a few minutes,contact your local distributor, our sales office, or service center.
56c	KebabHS Encoder Malfunction	• The KebabHS encoder is not reading correctly.	• Turn off the power on the machine and turn it on after a while.☞ "Turning Off the Power"(P. 37)
602	Ink End	• The ink has run out.	• Replace with new ink. ☞ "When Ink End is Displayed"(P. 43)
604	Check Waste Ink tank	• The waste ink tank has reached its capacity.	1. Check the waste ink levels in the waste ink tank. ☞ "Waste Ink Confirmation Message"(P. 104)

Error number	Message	Cause	Corrective action
			2. Replace the waste ink tank, then reset the waste ink level. ☞ "Procedures for Disposing of Waste Ink"(P. 105)
608	Wrong Ink IC	• An error occurred with the information on the ink IC chip.	1. Check to confirm the ink IC chip was inserted correctly. ☞ "Replacing Ink"(P. 43) 2. Turn off the power on the machine and turn it on after a while.☞ "Turning Off the Power"(P. 37) 3. Replace with new ink. ☞ "Replacing Ink"(P. 43)
60a	Excess Ink Usage	• Because the ink IC chip was not replaced at the same time as the ink, the usage on the ink IC chip exceeded the specified limit.	• Please replace the ink and ink IC chip in the ink slot where the warning is displayed.
60c	Ink Type	• The ink type specified on the ink IC chip differs from the ink that has been filled into the cartridge.	• Please check the ink type for the slot where the warning is occurring. ☞ "Replacing Ink"(P. 43)
629	Expiration Near	• The ink has expired (less than 2 months since the expiration date).	• Please replace the ink and the ink IC chip. (You can use it up to two months after the expiration date.) ☞ "Replacing Ink"(P. 43)
62a	Expiration Over	• The ink is expired (more than two months have passed since the expiration date)	• Please replace the ink and the ink IC chip.☞ "Replacing Ink"(P. 43)
631	Ink Color	• The ink color indicated on the ink IC chip differs from the ink that has been filled into the cartridge.	• Please check the ink color of the slot where the warning is displayed.
637	INK LEAK _	• The ink leak sensor detected an ink leak.	• Contact your local distributor, our sales office, or service center.
650	NCU Connect	• A problem was detected with the NCU connection.	• Turn off the power on the machine and turn it on after a while.☞ "Turning Off the Power"(P. 37)
651	Replace NCU	• A problem was detected with the nozzle clogging assessment.	• The NCU must be replaced. Contact your local distributor, our sales office, or service center.
652	NCU Nzk Chk (Hw)	• A problem was detected with the nozzle clogging assessment.	• Clean the NCU. ☞ "NCU Cleaning"(P. 97)
653	NCU Nzk Chk (Mark)		
654	NCU Center Pos	• Printing position adjustment failed.	
655	NCU Flush Pos		
656	NCU SN Adjst	• Sensor sensitivity adjustment failed.	

Error number	Message	Cause	Corrective action
657	Replace NCU Ink Pad	• The NCU ink absorber is full.	• The NCU ink absorber must be replaced. Contact your local distributor, our sales office, or service center.
658	NCU Sensor Lv Low	• The sensor's sensitivity is impaired.	• Clean the NCU. ☞ "NCU Cleaning"(P. 97) • Replace the NCU if the error does not clear. Contact your local distributor, our sales office, or service center.
65b	NCU Sens Adj Err H	• Sensor sensitivity adjustment failed.	
65c	NCU Sens Adj Err L		
683	Wiper Near End	• The wiper fluid is running low.	• The cloth wiper will run out soon. Have a new cloth wiper ready.
684	Wiper End	• I'm out of wiper fluid.	• Replace with a new cloth wiper. ☞ "Cloth Wiper Replacement"(P. 100)
706	UV Lamps: Ondo Takai	• The UV-LED unit became hot.	• If this occurs frequently, contact your local distributor, our sales office, or service center.
707	Head Heater Break	• The head heater is defective. (The temperature does not rise even when heated beyond the stipulated duration.)	• Turn off the power on the machine and turn it on after a while.☞ "Turning Off the Power"(P. 37)
70b	DRV OVHT	• The UV-DRV PCB became hot.	
711	LED OVHT*	• The UV-LED PCB became hot.	• Turn off the power on the machine and turn it on after a while.☞ "Turning Off the Power"(P. 37)
715	Ink Heater Therm Brk	• The ink heater thermistor cannot be read properly.	
716	Ink Heater Temp	• An ink heater temperature abnormality was detected.	
717	InkHeater Brk	• The ink heater is defective. (The temperature does not rise even when heated beyond the stipulated duration.)	
71a	UV-DRV Fuse	• A blown fuse on the UV-DRV PCB was detected.	• The fuse must be replaced. Contact your local distributor, our sales office, or service center.
71e	Head Temp Error	• A head temperature abnormality was detected.	• Turn off the power on the machine and turn it on after a while.☞ "Turning Off the Power"(P. 37)
71f	Head Therm Break	• The head thermistor cannot be read properly.	
753	Ink Heater Temp (HW)	• An ink heater temperature abnormality was detected.	• Turn off the power on the machine and turn it on after a while.☞ "Turning Off the Power"(P. 37)
754	Ink Heater Temp	• An ink heater temperature abnormality was detected for a specified time.	

Error number	Message	Cause	Corrective action
755	Head Temp Error (HW)	• A head temperature abnormality was detected.	
756	Head Temp Error	• A head temperature abnormality was detected for a specified time.	
75f	KBBHS UV Lamp, On-Takai	• The UV unit on the KebabHS got very hot.	• Please make sure that no foreign matter is stuck to the cooling fans at the front and rear ends of the UV lamp unit.
760	KBBHS UV Drive: On and Takaï	• The KebabHS UVD32B PCB became hot.	• Please check that no foreign matter is stuck to the cooling fan on the front side of the PCB box.
801	(C) OPCODE	• A problem was detected with the main PCB.	• Turn off the power on the machine and turn it on after a while.☞ "Turning Off the Power"(P. 37)
802	(C) SWI		
803	(C)PFTCHABRT		
804	(C)DATAABRT		
806	FW/SIO bit	• A communication error was detected between the boards.	
808	FW/STP-MTR**	• A problem was detected with the main PCB.	
80f	FW/SIO Vch	• A communication error was detected between the boards.	
811	FW/SIO read:****	• A communication error was detected between the boards.	
81b	FW/STACK OV	• A problem was detected with the main PCB.	
828	PRG ERR L*****		
901	Operation Error	• The function is disabled due to an error.	• Check the error details. – Media Undetected – Ink Error – Waste ink tank, etc.
902	Data Remain	• Print (RIP) data was received.	• Switch to REMOTE mode and start printing or clear the data and abort printing.
90f	Print Area Short	• The media is too small for the print.	• Replace with wider or longer media. • If the printable area is reduced due to a shift in the origin, move the origin to increase the size of the printable area.
b1a	PCB BaseIO	• A communication error was detected between the boards.	• Turn off the power on the machine and turn it on after a while.☞ "Turning Off the Power"(P. 37)
b1b	BaseIO PCB Vpow-s	• A problem was detected with the Base IO PCB power supply.	
b1c	BaseIO PCB V24		

Error number	Message	Cause	Corrective action
b1e	PCB BaseIO-F**	• The Base IO PCB fuse blow was detected.	• The fuse must be replaced. Contact your local distributor, our sales office, or service center.
b1f	PCB HDCE*	• A communication error was detected between the boards.	• Turn off the power on the machine and turn it on after a while.☞ "Turning Off the Power"(P. 37)
b2f	PCB HDCE*-F*	• A blown fuse on the HDCE PCB was detected.	• The fuse must be replaced. Contact your local distributor, our sales office, or service center.
b36	PCB INKIO	• A communication error was detected between the boards.	• Turn off the power on the machine and turn it on after a while.☞ "Turning Off the Power"(P. 37)
b3f	BaseIO Unconform	• The PCB could not be detected.	
b42	PCB UVD32B	• A communication error was detected between the boards.	• Turn off the power on the machine and turn it on after a while.☞ "Turning Off the Power"(P. 37)
b46	PCB SubIO	• A communication error was detected between the boards.	
b47	UVD32B PCB Uvpow	• A problem was detected with the UVD32B PCB power supply.	
b48	PCB HDCE	• A communication error was detected between the boards.	• Turn off the power on the machine and turn it on after a while.☞ "Turning Off the Power"(P. 37)
b49	PCB HDCE-VHVFET[12]	• The FET for the head power supply shown on the HDCE PCB [ ] is damaged.	
b4a	PCB HDCE*-F*	• A blown fuse on the HDCE PCB was detected.	• Contact your local distributor, our sales office, or service center.
b4b	HDCE* PCB V1R2	• A problem was detected with the HDCE PCB power supply.	• Turn off the power on the machine and turn it on after a while.☞ "Turning Off the Power"(P. 37)
b4c	HDCE* PCB V2R5		
b4d	HDCE* PCB V3R3		
b4e	PCB SubIO-F*	• A blown fuse on the SubIO PCB was detected.	• The fuse must be replaced. Contact your local distributor, our sales office, or service center.
b4f	SubIO PCB Vpow-s	• A problem was detected with the SubIO PCB power supply.	• Turn off the power on the machine and turn it on after a while.☞ "Turning Off the Power"(P. 37)
b50	SubIO PCB FANPOW	• A problem was detected with the SubIO PCB power supply.	
b51	BaseIO PCB V24adj	• A problem was detected with the Base IO PCB power supply.	

Error number	Message	Cause	Corrective action
b54	PCB INKIO-F*	• A blown fuse on the ink PCB was detected.	• The fuse must be replaced. Contact your local distributor, our sales office, or service center. • Turn off the power on the machine and turn it on after a while.☞ "Turning Off the Power"(P. 37)
b6C	INKIO PCB V3R3	• An abnormality was detected in the power supply of the InkIO PCB.	
b6d	UVD32B Fuse Error	• A blown fuse was detected on the KebabHS UVD32B32 PCB.	• The fuse must be replaced. Contact your local distributor, our sales office, or service center.

SYSTEM HALT

Display	Corrective action
SYSTEM HALT (*) 000: Message	• Turn off the power on the machine and turn it on after a while. Check the number, thencontact your local distributor, our sales office, or service center. (“000” is the error number).

Chapter 6 Appendix



This chapter

contains the lists of the specifications and functions of this machine.

Specifications 128
Options List 130
LICENSE Library 131

6.1 Specifications

Item			UJF200-3042	UJF200-6042
Print Head Assembly	Type Specifications		On-demand piezo head	
			1 head (400 head nozzles × 8 rows)	
	Resolution	X	600 dpi, 900 dpi, 1200 dpi, 1800 dpi	
		Y	600 dpi, 900 dpi, 1200 dpi	
Drawing Mode (Y-dpi × X-dpi)	600 x 900		6, 8 passes	
	900 x 1200		8, 10 pass	
	1200 x 1200		8, 12 passes	
	1200 x 1800		12, 16 passes	
	1200x600		6, 8, 12 passes (LD1/2 mode)	
	1200x900		8, 10, 12 passes (LD1 mode)	
Compatible Ink			Specialty UV curing ink (our genuine ink)	
Ink supply			8-Bottle Supply	
Usable media	Size		300 x 420 mm	610 x 420 mm
	Thickness		Max. 250 mm	
	Weight		Max. 20 kg	
Maximum Print Area			300 x 420 mm	610 x 420 mm
distance accuracy	Absolute accuracy		± 0.3 mm or ± 0.3% of the specified distance, whichever is greater	
	Duplicability		± 0.2 mm or ± 0.1% of the specified distance, whichever is greater	
Perpendicularity			± 0.3 mm / 400 mm	
Printing Gap Adjustment			Equipped with a table height adjustment mechanism operated by operating keys	
Head Collision Prevention Device			Head Collision Prevention Using Obstacle Sensors	
UV unit			1 air-cooled LED UV unit (mounted on a head slider)	
Waste Ink Tank			Bottle type (1,600 cc)	
Interface *3			USB 2.0 (Ethernet 10BASE/100BASE/1000BASE email functionality; however, diagramming is supported only for "1000BASE")	
Command			MRL-V	
Noise levels	During standby		55 dB or less (FAST-A, 1 m in all directions)	
	Continuous Operating Sound		70 dB or less	
Compliance with standards			VCCI Class A, FCC Class A, EC 62368-1-compliant ETL, CE marking (EMC Directive, Machinery Directive, Low Voltage Directive), CB certified, RoHS-compliant, REACH-compliant, Energy Star, EAC marking, RCM marking	
Power supply specifications			Single-phase AC 100–240 V ±10% / 5 A, 50/60 Hz ±1 Hz	
Power consumption			Maximum: 450 W or less; Standard: 250 W; Minimum: 4.5 W or less	

Item		UJF200-3042	UJF200-6042
Installation environment	Permissible ambient temperature	20 °C to 30 °C	
	Relative humidity	35–65% RH (no condensation)	
	Temperature range in which accuracy is guaranteed	20 °C to 25 °C	
	Temperature gradient	±10 °C/h or less	
	Dust	Office-equivalent	
	Maximum Operating Altitude	2000 m	
Weight *1		171 kg (259 kg)	187 kg (275 kg)
Unit external dimensions	Width	1,380 mm	1,680 mm
	Depth	1,166 mm	
	Height *1*2	1,186 mm(1,524 mm)	
External dimensions of the Dedicated Base	Width	1,058 mm	
	Depth	968 mm	
	Height	338 mm	

*1. ( ) Includes the cost of the dedicated base

*2. Including the load indicator light

6.2 Options List

No.	Options	Code	UJF200-3042	UJF200-6042	Remarks
1	Exhaust Fan Unit	OPT-J0424	Good	Good	Separate operating manual (D204011)
2	Kebab MkII	OPT-J0432	Good	-	The Operation Manual is attached as a separate document. (Japanese: D203139, English: D203140)
3	Kebab MkII L	OPT-J0433	-	Good	
4	Kebab HS	OPT-J0528	Good	Good	The Operation Manual is attached in a separate document. (Japanese: D203608, English: D203843)
5	Deodorizer Options	OPT-J0515	Good	Good	☞ "Replacing the Deodorizer Filter"(P. 108)
6	Ionizer 60	OPT-01032	-	Good	Separate operating manual (D204010)
7	Ionizer 30	OPT-01033	Good	-	
8	Dedicated Base	OPT-01034	Good	Good	
9	Indicator Light	OPT-01050	Good	-	☞ "Pilot Light (Indicator Light)"(P. 28)
10	Suction Table 30P	OPT-J0525			☞ "About the table"(P. 32)

6.3 LICENSE Library

Mimaki printer Firmware

Copyright @2020 MIMAKI ENGINEERING CO.,LTD. All rights reserved.

This product contain open source software listed in the tables below.

Component	License
StarterWare for ARM® based TI Sitara Processors	BSD-TI

The following license terms and conditions shall apply to the open source software listed in the table above:

BSD-TI

Copyright (C) 2010 Texas Instruments Incorporated - http://www.ti.com/

Redistribution and use in source and binary forms, with or without modification, are permitted provided that the following conditions are met:

1. Redistributions of source code must retain the above copyright notice, this list of conditions and the following disclaimer.
2. Redistributions in binary form must reproduce the above copyright notice, this list of conditions and the following disclaimer in the documentation and/or other materials provided with the distribution.
3. Neither the name of Texas Instruments Incorporated nor the names of its contributors may be used to endorse or promote products derived from this software without specific prior written permission.

THIS SOFTWARE IS PROVIDED BY THE COPYRIGHT HOLDERS AND CONTRIBUTORS "AS IS" AND ANY EXPRESS OR IMPLIED WARRANTIES, INCLUDING, BUT NOT LIMITED TO, THE IMPLIED WARRANTIES OF MERCHANTABILITY AND FITNESS FOR A PARTICULAR PURPOSE ARE DISCLAIMED. IN NO EVENT SHALL THE COPYRIGHT OWNER OR CONTRIBUTORS BE LIABLE FOR ANY DIRECT, INDIRECT, INCIDENTAL, SPECIAL, EXEMPLARY, OR CONSEQUENTIAL DAMAGES (INCLUDING, BUT NOT LIMITED TO, PROCUREMENT OF SUBSTITUTE GOODS OR SERVICES; LOSS OF USE, DATA, OR PROFITS; OR BUSINESS INTERRUPTION) HOWEVER CAUSED AND ON ANY THEORY OF LIABILITY, WHETHER IN CONTRACT, STRICT LIABILITY, OR TORT (INCLUDING NEGLIGENCE OR OTHERWISE) ARISING IN ANY WAY OUT OF THE USE OF THIS SOFTWARE, EVEN IF ADVISED OF THE POSSIBILITY OF SUCH DAMAGE.

Index

A

AC inlet 26
Air PG 76
Auto Maint. 76
Auto Power-off 71
Auto Power-on 71
AutoIP 81

B

Bottle cap 44, 46, 47

C

Cap 87, 106
Cap rubber 93
Capping station 26
Carriage 26, 87
Cleaning 72
Color profile 41

D

Clear Data 30
DHCP 81
Deodorizer Filter (Optional) 108
DISCLAIMERS 5
Display 29

E

Ejection failures 77, 90
Emergency Stop 26
[END/POWER] key 29, 36, 37
[ENTER] key 29
Error History 83

F

FCC 6
Feed Comp. 71
Front cover 27
[FUNC1] key 29
[FUNC2] key 29
[FUNC3] key 29

G

Flashing green
Flashing green 30

H

Head gap 69
emergency stop switch 26
Indicator light 26

I

Setting the Origin 69
Ink discharge channel 87
Ink Discharge Path 93
Ink End 43
Ink IC chip 49
Ink IC chip slot 27
INK NEAR-END 43
Ink Supply Unit 27, 49
ink
Near End 30
Ink End 30
Ink Full 30
Inlet 35
Installation guide 41, 42
Installation Space 17
Interference 5
Ionizer 70

J

Jog Key 29

K

Key Buzzer 79

L

Illuminated Lamp Status and Device Status 29
Light blue flashing 29
Light is illuminated in blue 29
Red light illuminated 30
Flashing red 30
Off 29
Yellow flashing light 30
Illuminated Lamp Status and Device Status
Blue light illuminated 29

LAN cable 38
LAN port 26
LANGUAGE 79
Length 79
Light-blocking cover 44
List 83
Logical Seek 71

M

Machine Reset 80
Main power switch 26, 36
Maintenance cover 27
Maintenance History 83
MAPS (Mimaki Advanced Pass System) 69
MSPS 69
Maximum Print Area 128
Media Information 69
Media Name Change 70
Media selection 68
Mimaki driver 41
MIST FILTER 87

N

NCU (Nozzle Check Unit) 87, 97
Network 79, 81
Network Configurator 81
Nozzle Check 72, 75, 78
Nozzle clogging 78
Nozzle Recovery 77

O

Temp. 79
Operating Panel 26
Optional Jig Set 80

P

Power cable 35
Power Off 37
Power outlet 35
Power plug 35
Power Setting 71
Print Area 83

print conditions 59
Print Length 83
Print Maint. 76
Print origin 55
Print Complete Buzzer 79

R

RasterLink 41, 42
Remote Control 79
Retry Count 72
Replace Wiper 100
Roll Wiper Remain 83

S

Safety Interlocks 19
[SEL] key 29
Sensor sensitivity 115, 121, 122
Slide Cover 27
Nozzle Recovery 75
Standby 37
Station Maint. 75
Status Indicator Light 29
Switching hub 39
Symbol 7

T

table 26
Test Patterns 58
Test Printing
SCAN Direction 57
Time Set 79

U

Unit Setting 79
Usage 83
USB interface cable 38
USB port 26
Use Time 83
UV AdjVal 69
UV mode 69
UV-LED Unit 87

V

Vacuum Fan 69
Version 83

W

Warning Label 21
Waste Ink Tank 26, 76, 83, 87
White Maintenance 76
Wiper 90, 100
Work Change 69

MEMO

UJF200-3042/6042_OperationManual

Nov. 2026

MIMAKI ENGINEERING CO.,LTD.
2182-3 Shigeno-otsu, Tomi-shi, Nagano 389-0512 JAPAN

D203973-11-25112026



© MIMAKI ENGINEERING CO., LTD.2026

AT

FW : 1.2